CRC Construction Innovation

BUILDING OUR FUTURE

Final Report
Interoperable Standards Development

Research Project No: 2007-001-EP

The research described in this report was carried out by

Project Leader Erik Isokangas

Team Members Ashley Byrnes
John Coglan
Robin Drogemuller
Don Hicks
Michael Jensen
David Nielsen
John Oliver

Research Program: EP
Extension Program

Project 2007-001-EP
Interoperable Standards Development

Date: April 2009

Leaders in Construction and Property Research

Distribution List

Cooperative Research Centre for *Construction Innovation*

Please direct all enquiries to:

Chief Executive Officer
Cooperative Research Centre for Construction Innovation
9th Floor, L Block, QUT, 2 George St
Brisbane Qld 4000
AUSTRALIA
T: 61 7 3138 9291
F: 61 7 3138 9151
E: enquiries@construction-innovation.info
W: www.construction-innovation.info

TABLE OF CONTENTS

LIST OF FIGURES

LIST OF TABLES

1. PREFACE

Since 1995 the buildingSMART International Alliance for Interoperability (buildingSMART) has developed a robust standard called the Industry Foundation Classes (IFC). IFC is an object oriented data model with related file format that has facilitated the efficient exchange of data in the development of building information models (BIM).

The Cooperative Research Centre for *Construction Innovation* has contributed to the international effort in the development of the IFC standard and specifically the reinforced concrete part of the latest IFC 2x3 release. Industry Foundation Classes have been endorsed by the International Standards Organisation as a Publicly Available Specification (PAS) under the ISO label ISO/PAS 16739. For more details, go to http://www.tc184-sc4.org/About_TC184-SC4/About_SC4_Standards/

The current IFC model covers the building itself to a useful level of detail. The next stage of development for the IFC standard is where the building meets the ground (terrain) and with civil and external works like pavements, retaining walls, bridges, tunnels etc. With the current focus in Australia on infrastructure projects over the next 20 years a logical extension to this standard was in the area of site and civil works.

This proposal recognises that there is an existing body of work on the specification of road representation data. In particular, LandXML is recognised as also is TransXML in the broader context of transportation and CityGML in the common interfacing of city maps, buildings and roads. Examination of interfaces between IFC and these specifications is therefore within the scope of this project. That such interfaces can be developed has already been demonstrated in principle within the IFC for Geographic Information Systems (GIS) project.

National road standards that are already in use should be carefully analysed and contacts established in order to gain from this knowledge. The Object Catalogue for the Road Transport Sector (OKSTRA) should be noted as an example.

It is also noted that buildingSMART Norway has submitted a proposal for an “IFC for Roads” project. This project will collaborate closely with developments in this area and ensure that the resulting definitions match Australian practice.

2. EXECUTIVE SUMMARY

Interoperability, the ability to freely and accurately exchange digital information between different software, has long been a challenging goal for the architectural, engineering and construction industry.

In recent years the buildingSMART International Alliance for Interoperability has developed a robust standard called the Industry Foundation Classes (IFC). IFC is an object oriented data model with related file format that has facilitated the efficient exchange of data in the development of building information models (BIM).

The CRCCI has contributed to the development of the IFC standard in relation to buildings and this project addresses the next stage of IFC development for the building-ground interface and other site and civil works (foundations, pavements, tunnels, retaining walls, bridges, mines, etc).

The extension of the current IFC schema into the realm of site works was made in collaboration with industry partners and involved the creation of many new IFC objects. This information was also communicated to the buildingSMART Norway's *IFC for Roads* project as part of the CRCCI's international collaboration effort.

In order to demonstrate the viability of these landscape and roads Objects, an exchange scenario was tested on a typical Queensland Project Services Landscape project. After some software modification IFC models were successfully exchanged between civil engineering software, 12D, and architectural software, Revit. This was achievable within the time and resources of the project.

One issue that emerged was the need for the exchange of "design goals". Since a landscape architect works within the physical site context defined by the civil engineer, the landscape architect needs to know which sections of the site have been contoured to provide flows for water moving into the drainage system. This is to avoid inadvertent frustration of water flow patterns.

While the project was successful, a barrier to achieving better results stemmed from obtaining information, data, files and in-kind when it was required to progress the project. This is understandable in a project with a diverse range of participants with varying expectations but did impact on the comprehensiveness of the results.

Each of the participants in the project had different goals and expectations. All of the industry partners were users of 12D, so the project needed to demonstrate a gain over the functionality that already existed in 12D in order to provide identifiable benefits to the industry partners.

As a contractor, Thiess gained a deeper understanding of the IFC model and of the landscape design process and how landscape information would feed into their estimating and project management activities. Thiess lead the 3D laser scanning activity. This provided information on the use of laser scanning to provide rapid information on existing conditions and the development of the point cloud results into useful BIM models of facilities.

Being design organisations, Project Services (as part of the Queensland Department of Public Works) and the Queensland Department of Main Roads have a better understanding of the implications of IFC implementation for infrastructure and landscaping modelling. It has also given clarity in their internal processes for digital modelling.

Project Services had higher expectations of the project than what was achieved but acknowledged that this may have been due to a level of naivety of what was required. The project has lead to a radical change of thinking for the drafters in the landscaping section that highlighted the importance of this work. It was also a catalyst to define work processes for ArchiCAD in the landscaping space. There was also a lot if interest in the 3D scanning. This would provide significant time savings if the data could be brought directly into an architectural package. Participation in the project also brought out the significant loss in capability in the use of the 12D software brought about by staff movements.

The Department of Main Roads was expecting the data exchange work to raise the level of interest in the Department. The project has achieved initial awareness which will allow Main Roads to build to the next stage.

As a software developer and vendor, this project provided the first exposure of 12D to the IFC model. The implementation provided significant challenges since 12D is a surface modelling package and has no explicit internal representation of objects. The structured use of internal representations allowed the simulation of “object-orientedness” within the 12D software. There is interest within 12D in continuing development of an IFC interface. Participation in this project will provide technical input to possible future changes to the internal representations used in the 12D software.

As an educational provider and research institution, QUT gained insights into the use of object-based CAD in the landscape design process and the use of 3D laser scanning. This will be taken up in several of the courses taught within the Faculty of the Built Environment and Engineering.

It was not the intention within the scope of this project to commercialise the outputs, but to contribute to the international body of knowledge. However, the project did demonstrate a significant user need and a potential commercial opportunity for software houses. The industry partners all agreed that there is a global need to create a standard for digital modelling of terrain and roads. This is an area which is not currently well supported within the IFC model. It is hoped that the results of this, and other related projects such as IFC for Roads, will lead to improved support for construction work outside of the envelope of buildings.

Information on the prototype IFC model and the Final Report will be provided to the buildingSMART International technical Committee Meeting. The prototype IFC model extensions and report will be provided to buildingSMART International to ensure the IFC standard benefits from this work.

As shown in a trial application at QUT campus, laser scanning is a powerful tool for the collection of accurate and detailed data about the geometry of structures. Creating intelligent models from this data is possible. What still remains to be seen is a robust method and toolset for migrating the rich information stored in the models between building and civil applications. The potential number of applications for such a tool is diverse, but developing such interoperability will require more time and resources.

3. INTRODUCTION

This project has the following primary aims:

- To identify users requirements for the exchange of information between architects, landscape architects and civil engineers for the areas around buildings.
- To define extensions to the IFC model which capture client requirements
- To build a test implementation of the IFC schema
- To assess the usefulness of 3D laser scanning to capture existing buildings and landscape.

The authors have consulted widely with Industry Partners (Thiess, Rider Levitt Bucknell, 12D, Queensland's' Project Services and Main Roads) actively involved in site works; site works being defined as the wider site context that generally lies outside of the traditional building envelope. Elements of particular concern to this project include roads, underground services, earthworks and landscape information. In an effort to extend the knowledge gained though the broad consultative process, collaboration with another current buildingSMART project 2007-002-EP National Manual & Case Studies was additionally undertaken. This document discusses recent notions and initiatives surrounding the free-exchange of digital design information with the realms of roads, underground services, earthworks and landscape information. Particular emphasis is given to introducing Extensible Mark-up Language (XML) and the IFC. This review is attached as *Chapter 4: Background.*

Broad consultation has also allowed the attainment of the specific aim of this project i.e. the extension of the current IFC schema into the realm of site works. The IFC is an initiative by the buildingSMART to devise a transparent and accessible file format that will allow interoperability of digital design information within the building industry. From both the Literature Review and a review of the current IFC definition, it became clear that the current schema (2x3) did not allow for the inclusion of elements specific to landscape and roads, while underground services and earthworks were partially covered. Following a process of discussion with the Industry Partners, Objects and associated Object Properties were defined for both Landscape and Roads. The resultant documentation is attached as *Chapter 5: IFC-based documentation and spreadsheet information*. This road and landscape information was communicated to the buildingSMART Norway's *IFC for Roads* project.

In order to demonstrate the viability of the landscape and roads Objects, an exchange scenario was proposed that replicated a typical Queensland Project Services Landscape project (Figure 3.1). A process manual illustrating the integrated digital models for Landscape Design was produced. The IFC was intended as the *language* of the proposed information exchange and for the exchange scenario to succeed all the involved software had to be IFC capable. The two primary software systems involved were 12D and ArchiCAD. While ArchiCAD was capable of IFC exchange 12D was not. As a result, a process was undertaken to enable IFC compatibility in 12D

Figure 3.1 Exchange scenario proposed to demonstrate the Interoperable Standards Project.

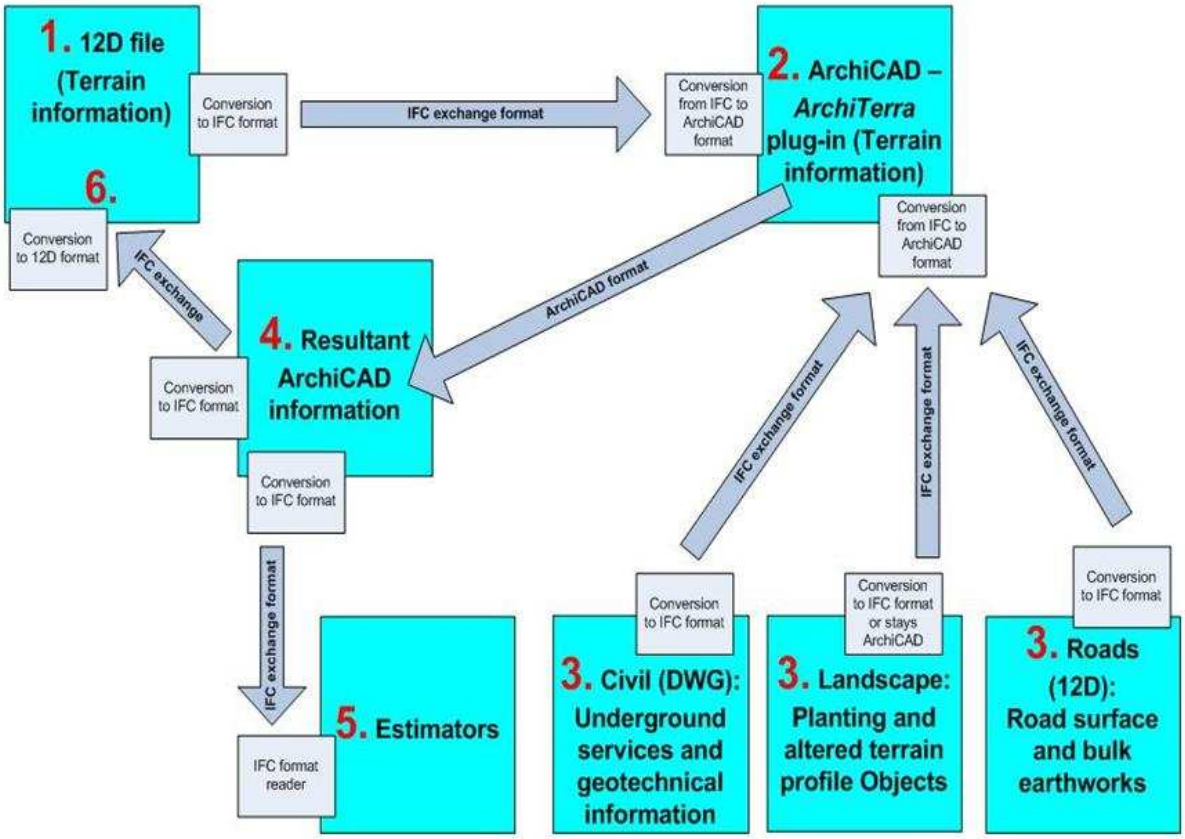

4. BACKGROUND

4.1 Introduction

The interoperability (ability to freely and accurately exchange digital information) of diverse computer applications within the fields of Architectural, Engineering and Construction (AEC) has steadily gained in importance. Initial attempts at interoperability revolved around the use of vendor specific file formats that facilitated the sharing between 2D CAD (Computer Aided Drafting) applications; the most notable of these being the Drawing Exchange Format (DXF). With the emergence of the Product Model in AEC taking the form of BIM and its subsequent uptake in the early 21st century, the DXF format no longer sufficed. Two primary contenders have emerged to facilitate the interoperability of Product Model digital information; the earlier IFC and the latter XML (Extensible Mark-up Language). Currently, both XML and IFC competently cover most aspects of singular buildings, while peripheral site elements (landscape and civil engineering works), local authority compliance and to a lesser extent facilities management are largely neglected. This chapter introduces a number of product models and encoding technologies.

4.2 The Rise of the Product Models

The first CAD software essentially mimicked the traditional pen-and-paper drafting process of the drawing board, through the creation of industry specific representations (plan, section, elevations, schedules, etc.) of a building and its construction. These early CAD programs enabled only the drawing of fundamental two dimensional representational primitives, such as points, lines, and closed lines called Polylines. The major advantages of these early CAD systems was simplicity, precision and because it mimicked established industry practice, relevance and almost universal acceptance. Information was exchanged between disparate software packages using the proprietary but universal DXF (Drawing Exchange Format) format. However, a major difficulty emerged in these early exchanges as no information was available about a 2D objects interrelations and dependencies; essentially only basic 2D geometry was transferred. As a result, a significant amount of information remained within the program used to create the original information, while additionally during transfer information was lost, corrupted or assumed.

In an attempt to improve and automate the exchange of data between disparate software packages, the Product Model or Engineering Design emerged in the late 1980's. A Product Model operates on the premise that there is one standard (syntax and semantics) for the exchange of information within an integrated product database. Two of the major problems of Product Models are that they become very complex as their size increases and that they do not yet cover all building elements. In an attempt to provide unique definitions to basic building elements both buildingSMART which has developed the IFC and software developers working with XML, have created various standards. (Cus-Babic, Magdic, Tibaut, *et al* 2000)

4.3 Extensible Mark-up Language (XML)

The term 'mark-up' is traditionally a publishing term in which skilled typographers known as *mark-up men* would '*mark-up'* a paper manuscript by adding symbolic printer instructions into the page margins. This process of 'marking-up' listed what typeface, style and size of text was to be used in each part of the final published manuscript; this 'marked-up' copy was then handed over for typesetting. Today mark-up is still commonly applied by editors, proofreaders and graphic designers. The notion of *mark-up languages* was apparently first attributed to a publishing executive William Tunnicliffe, who in 1967 proposed a system of *generic-coding* that essentially separated a document into distinct content or structure and formatting or presentation. Tunnicliffe later developed this initial *generic-coding* standard into an industry wide application, known as *GenCode*. However, Charles Goldfarb is today widely acknowledged as the established *architect* of modern computer *mark-up languages,* through his association with IBM (International Business Machines Corporation) GML (Generalised

Mark-up Language) and the International Organization of Standardisation work on SGML (Standardised Generalised Mark-up Language ISO 8879).

The notion of an *extensible language* refers to having the ability to be extend, supplement, modify or enrich the *syntax* of a document.

With the advent of the World Wide Web (WWW) mark-up languages, particularly the predominant HTML (Hyper Text Mark-up Language) being a direct descendant of SGML, came to the fore for the viewing of information. Initially content communicated over the *Web* mimicked that of a traditional paper page, thus a *Web* page and the use of mark-up languages.

HTML, as with SGML, is written in the form of *tags,* or simplistically metadata, that essentially describe a piece of information (picture, video, *blog* entry, etc.). *Tags* are usually represented on the Web in the form of hyperlinks that lead to a collection of information associated with that specific *tag*. A major difficulty with HTML is that it restricts the placement of *tags*, requiring *tags* to be either *fully nested* within other tags or alternatively the root *tag* of a document.

Another and increasingly popular mark-up language today is XML (Extensible Mark-up Language), being essentially a simplified version of SGML. This ability to freely define tags has been argued as either a major advantage (user *uptake* and malleability) or disadvantage (being developed by self-appointed technologists and entrepreneurs with no central coordination), depending on your perspective. XML is essentially explained by the World Wide Web Consortium (W3C) as the universal format for structured documents and data on the Web. (www.w3.org)

In response to XML, XHTML (Extensible Hyper Text Mark-up Language) has been developed. XHTML is essentially a hybrid of HTML and XML, having both the depth of expression of HTML while additionally conforming to the XML syntax.

Using XML as the base, Autodesk together with other partners developed LandXML as the supposed standard file exchange format for its land development, civil engineering, survey, and transportation software applications. LandXML was developed in response to a desire to achieve interoperability between the diverse software applications available to the above professionals. Essentially LandXML entails the description of information through the creation of *Elements* and the extension of these through *Attributes*. An example is the LandXML *element* PIPE that has the associated *attributes* of *name, refEnd, refStart, length, slope*, etc. In addition to *attributes, elements* can have further extension through subservient *elements* called *children*; In the case of the *element* PIPE its children include *CircPipe, EggPipe, ElliPipe, RectPipe, Channel, PipeFlow, Centre and Feature.* (www.landxml.org) (For more information of the LandXML schema see: http://www.landxml.org/schema/LandXML-1.1/documentation/LandXML-1.1Doc.html#element_Corner_Link0594A8A8)

Figure 4.1 **LandXML's definition of the Element PIPE with associated attributes and children. (Source: www.landxml.org)**

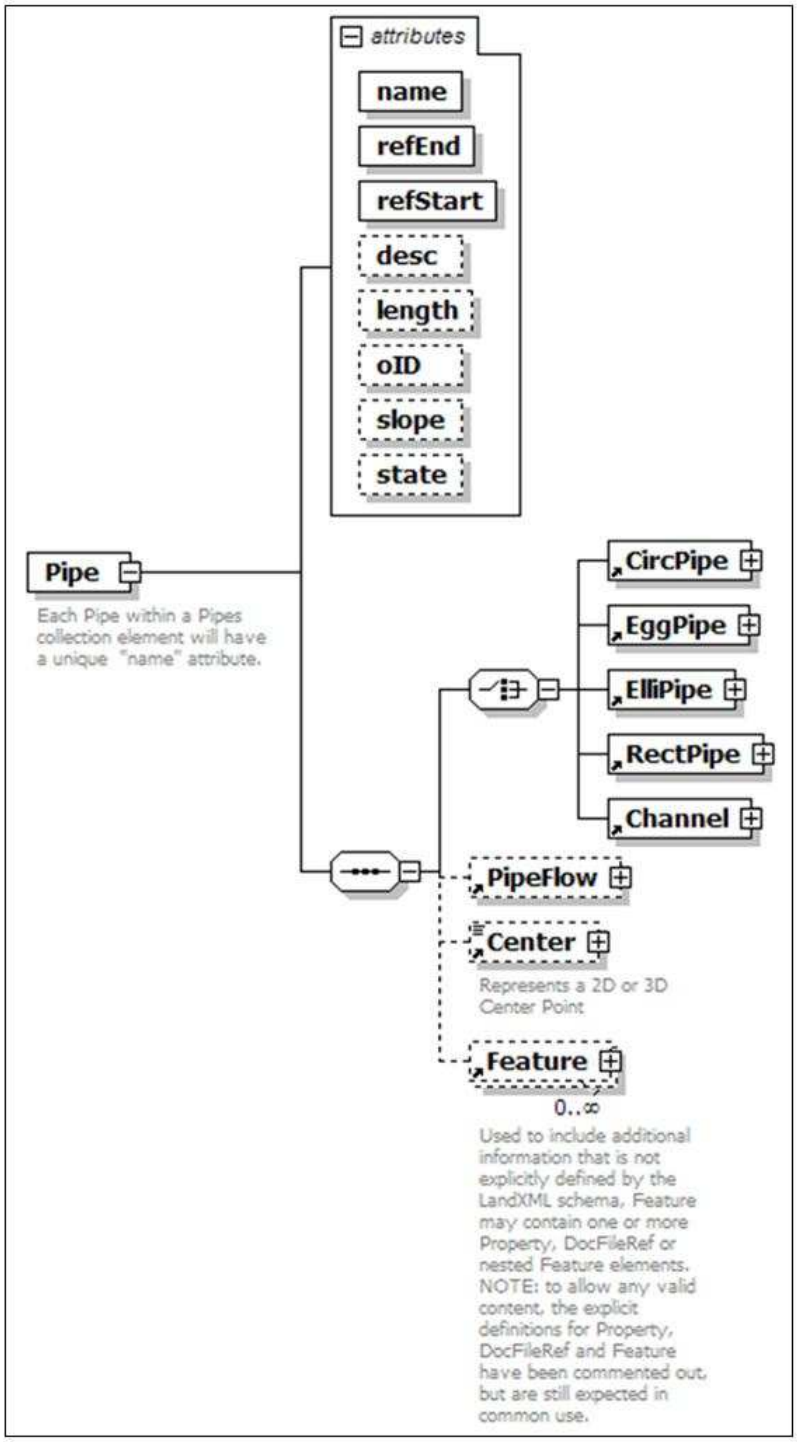

Simplistically *Elements* within LandXML can be referred to as *tags* with extensible behaviours or *attributes.* A recent addition to the LandXML 1.1 schema is the further definition of Roads. In the previous schema roads were included using only a simple definition of the top surfaces (mesh) of the road. In the latter version, roads are explained as a composite construction of three dimensional objects allowing detailed top and subsurface explanation of the entire road. In addition, roads are embodied with additional metadata that allows inclusion of aspects like travelling speeds, accident data, bridge elements, traffic volumes, etc. (www.landxml.org)

A further XML schema of interest is TransXML, intended to facilitate easier sharing of information between American transportation agencies. Completed in late 2006, TransXML

covers four primary areas namely: Survey and Road Design, Transportation Construction and Materials, Highway Bridge Structures, and finally Transportation Safety. (www.transxml.org)

Yet another XML based format with specific reference to the building industry is aecXML (Architecture Engineering and Construction Extensible Mark-up Language). As with LandXML above the stated intention of AECXML was to facilitate communication related to designing, specifying, estimating, sourcing, installing and maintaining construction projects and materials over the internet, (www.xml-coverpages.org). Initially developed by Bentley Systems in the late 1990's, it was not clear if aecXML would rival the IFC's (Industry Foundation Classes). However it soon emerged the aecXML was intended for all the non-graphic information concerning a construction. "…aecXML is for talking about things, not modelling them. We can use it to agree what 'door' means, but aecXML won't describe doors or model them." Bentley Developer Bhupinder Singh. (www.cadinfo.net/editorial/aecxml.htm) Currently, the status of aecXML is that it has merged with the buildingSMART. As mentioned above aecXML was intended to talk about things rather than modelling them, thus it had particular importance to the field within the construction industry where we quantify things i.e. estimating, scheduling and management. As the scope of the IFC's are currently being extended into these realms, the merger of the two organisations makes sense.

Table 4.1 **Showing an expanded explanation of the four main areas or business areas of transXML. Source: www.transxml.org**

Business Area	Schemas
Survey/Roadway Design	• **Area Features (AF) Schema –** Allows data from GIS to be overlaid on design drawings in CAD systems. • **Geometric Roadway Design (GRD) –** Subset of LandXML adopted into TransXML – allows for sharing of roadway alignment, cross sections, geometry across members of a design team, between designer and surveyor, and from design into machine controlled excavation equipment. • **Design Project (DP) –** Allows design project pay item data to be exchanged across design, cost estimation and bid preparation systems.
Transportation Construction/ Materials	• **Bid Package (BP) –** Supports exchange of construction bid package data between agency systems and contractor bid preparation software. • **Construction Progress (CP) –** Supports exchange of information about partial pay item quantities placed from field data collection systems to construction management systems. • **Materials Sampling and Testing (MST) –** Allows exchange of construction site installed quantities and materials used and tested information from field data collection systems to laboratory systems, central construction progress tracking and contractor payment systems. • **Project Construction Status (PCS) –** Allows exchange of construction project status information from construction management systems to stakeholder information systems (e.g., project web sites).
Highway Bridge Structures	• **Bridge Design and Analysis (BDA) –** Allows for analysis of the same structure in multiple structural analysis software packages.
Transportation Safety	• **Crash Report (CR) –** Allows exchange and sharing of crash records data. TransXML adopted the NHTSA/JusticeXML crash records XML Schema that is based on the Model Minimum Uniform Crash Criteria (MMUCC). • **Highway Information Safety Analysis (HISA) –** Allows for exchange of highway information between inventory systems and safety analysis software.
All	• Linear referencing (LR) – An XML schema for linear referencing information consistent with ISO 19133 – used by the other TransXML schemas.

4.4 buildingSMART International Alliance for Interoperability and Industry Foundation Classes

The buildingSMART has developed the IFC standard in an attempt to achieve interoperability of Product Model information that is both vendor-neutral and truly cross-system.

Figure 4.2 An IFC Object with its associated Relationships and Properties (Source: David Nielsen)

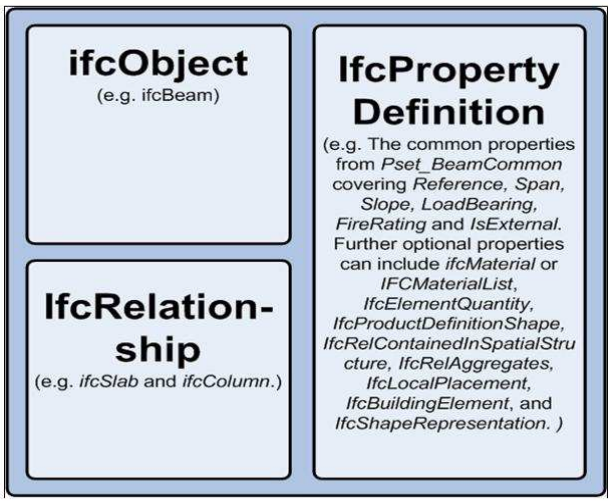

IFC's define data as real-world 3D objects rather than the traditional 2D graphic representations, through the use of the 3D object-orientated CAD concept. The IFC system comprises a standard set of definitions of most of the objects encountered in the construction of buildings, and a text based structure for storing these definitions in a data file and definitions for computer based queries against database (SDAI). As a result of this structure interoperability is theoretically achieved once information is placed in this text format and exchanged (via either an IFC "Save As" or "Import" function). Any software can supposedly exactly recompile the information in whichever compact binary file its system sees fit. (www.cadinfo.net/editorial/aecxml.htm) The IFC defines individual Objects with a building and further associates additional Properties and/or Objects to these. E.g. The object *ifcBeam* is used to graphically represent a horizontal structural member and has a common property set *Pset_BeamCommon* containing the properties *Reference, Span, Slope, LoadBearing, FireRating* and *IsExternal.* In addition to this common property set *ifcBeam* can have further property associations with other IFC objects, these being *ifcMaterial* or *IFCMaterialList*, *IfcElementQuantity, IfcProductDefinitionShape, IfcRelContainedInSpatialStructure, IfcRelAggregates, IfcLocalPlacement, IfcBuildingElement*, and *IfcShapeRepresentation.* (www.buildingSMART-international.org/Model/R2x3_final/index.htm)

It is interesting to note that the IFC specification is additionally available as an XML file, or ifcXML.

Having interrogated an IFC file export of a proposed Project Services development, the subsequent civil, road, landscape and underground services objects have to following IFC associations:

- Exterior lights are treated as *ifcDistributionFlowElements*
- Rainwater Tanks are treated as *ifcWallStandardCase*
- Road kerbs are treated as *ifcSlab*
- Parking bays (in this case a disabled bay) is treated as *ifcBuildingElementProxy*
- Batten (horizontal wooden slat) fences are treated as *ifcBuildingElementProxy*
- Flagpoles are treated as *ifcBuildingElementProxy*
- Signage (text) is treated as *ifcBuildingElementProxy* and the supporting decorative wall is treated as *ifcWallStandardCase*

- Bollards are treated as *ifcColumn*
- Trees, shrubs, rocks, planting bed profilers are treated as *ifcBuildingElementProxy*.
- Retaining walls are treated *as ifcWallStandardCase*.
- Pavements (or it could be a skirt around some of the building) are treated as *ifcSlab*.
- All sewerage and water supply pipes are treaded as *ifcFlowSegement* (sewer fittings - Toilets, Showers, Basins, etc. are treated as *ifcFlowTerminal)*.
- All electrical elements (Lights, heat and smoke detectors, switches, are treated as ifcDistributionFlowElemets; these objects are all above ground.

As the work on completing the graphic representations of objects within the IFC's moves slowly towards completion, with most objects associated with the actual building having already been defined, the current focus is primarily on extending the focus to those areas outside of the building envelope. Much work has already been completed for quantities and estimating, while a great deal remains to be done in the fields of civil works, underground services, roads, bridges, GIS, etc. Two completed IFC projects within this scope is IFC for GIS (Geographic Information Systems) and IFCBridge; with a further yet to be completed project IFCRoads. IFC for GIS was conducted primarily to enable the meaningful exchange of information (in an IFC format) between GIS and FM (Facilities Management) systems. Initiated by the Norwegian State Planning Authority with the intent to use the already existing Coordination and Code Checking entities of the IFC model and integrate these with those that existed within the established GML (Geographic Mark-up Language); providing a translation or bridge between FM (Facilities Management) and GIS systems. An additional intention of the project was developmental support for electronic planning and code checking of proposed buildings. (http://www.buildingSMART.no/ifg/Content/ifg_index.htm)

Figure 4.3 A part of the proposed IFC-Bridge schema for inclusion in the upcoming release of the IFC. Source Yabuki and Li (2007).

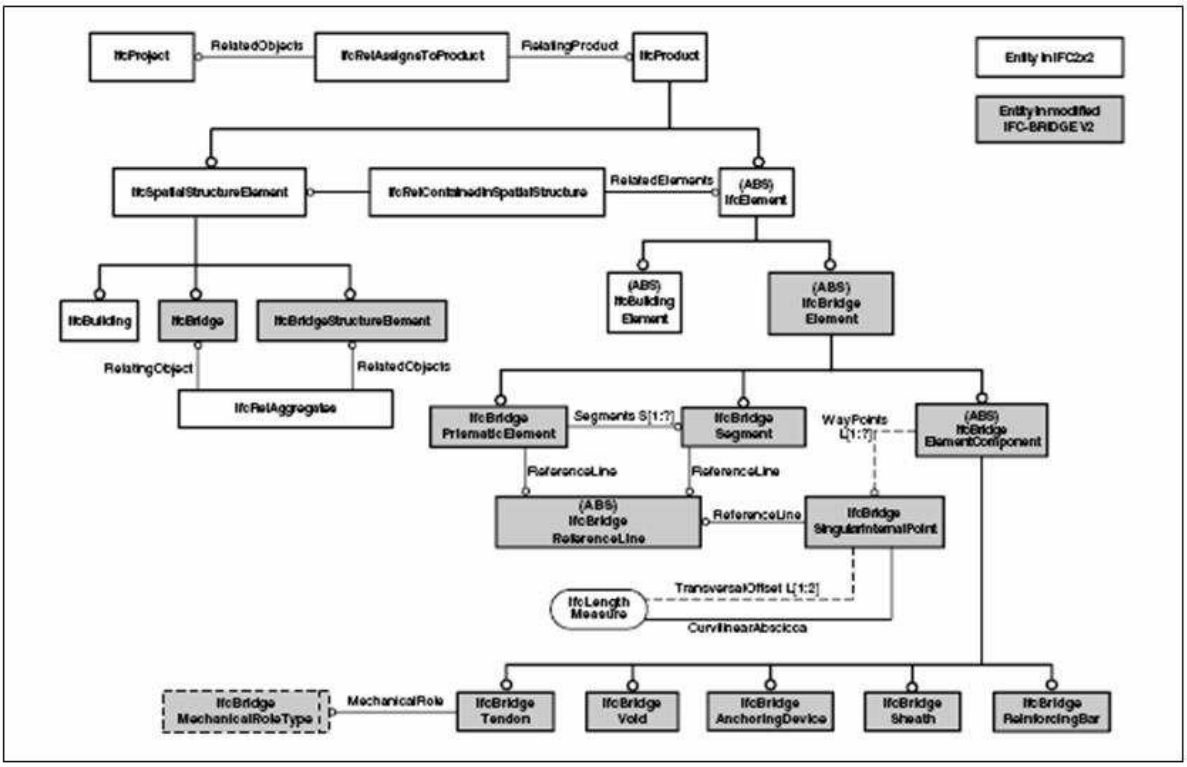

IFCBridge is the eventual resultant of efforts of the buildingSMAART's Japanese and French Chapters and was developed primarily to represent Bridge entities within the IFC's. The Japanese worked on two initial models, namely YLPC-Bridge (Yabuki Laboratory Prestressed Concrete) and YLSG-Bridge (Yabuki Laboratory Steel Girder), which were eventually merged into a final single model being, J-IFC-Bridge (J for Japan). YLPC-Bridge

expanded the property sets of exiting IFC 2x2 objects (slabs and contained members) by adding definitions for reinforcing bars, prestressing stands, voids, anchoring devises, etc. Implementation was accomplished using *ifcXML* as it was compatible with ISO's EXPRESS standardised modelling language. YLSG-Bridge employed a similar methodology as YLPC-Bridge while adding property sets addressing steel structural connections like webs and flanges while also defining general steel shapes like I, H, box, angle and pipe types. The French meanwhile developed a data model called OA_EXPRESS led by the Technical Department for Transport, Roads, Bridge Engineering and Road Safety (SETRA) of the Ministry of Ecology, Sustainable Development and Spatial Planning. In this model they demonstrated that bridge specific information could be exchanged between SETRA's 3D CAD bridge design software (OPERA) and its structural analysis program (PCP). The resultant merged entity of both the Japanese and French efforts is *IFCBridge* which is currently being finalised by the buildingSMART for inclusion in the next version of the IFC's. (Yabuki and Li)

Subsequent to conclusion of discussions concerning *IFCBridge,* the buildingSMART proposed a similar endeavour but concerned with road information, thus 'IFC for Roads'. It should be noted that bridges and roads, while simplistically seen as a holistic entity, are currently handled as disparate separate elements within the road network. Following an initial preliminary issue of the German OKSTRA road design, construction and management system (discussed in detail below) the buildingSMART proposed to officially pursue an IFC covering roads information.

4.5 Object Catalogue for the Road Transport Sector (OKSTRA).

(Please note: all the information concerning OKSTRA has been translated from German, thus certain inconsistencies of interpretation/meaning may have occurred.)

OKSTRA is an initiative headed by the German Federal Institute for Roads (BASt). It is described as a collection of objects within the field of roads and transport; with the primary aim of OKSTRA being the development of a common definition of these objects within a data schema. The data schema recognises three primary groupings of data: New Construction, Existing Roads Data and Traffic Data, each of these three is further divided into further separate schema. New Construction is divided into Design, Ecology, Acquisition of land, Engineering data, Cost calculations, Measurement, Land register, Road equipment, and General object geometry. Existing Roads Data is divided into Building data, Intersections, Road status data, Inventory data (comprising Structural characteristics like Cross-section, structural composition, etc.) and Road equipment (comprising Drainage, Offsite, etc.) Traffic Data is divided into Manual toll booths, Automatic toll booths, Signage (either dynamic or static) Axel load data, Accident data, Traffic volume, Traffic lights, and Single vehicle data. Apparently all of the Traffic Data and Existing Roads Data Schemas are available through an Internet interface.

Figure 4.4 **The OKSTRA data schema as translated from the original German. Source: Translated from the original German version (www.okstra.de) by David Nielsen**

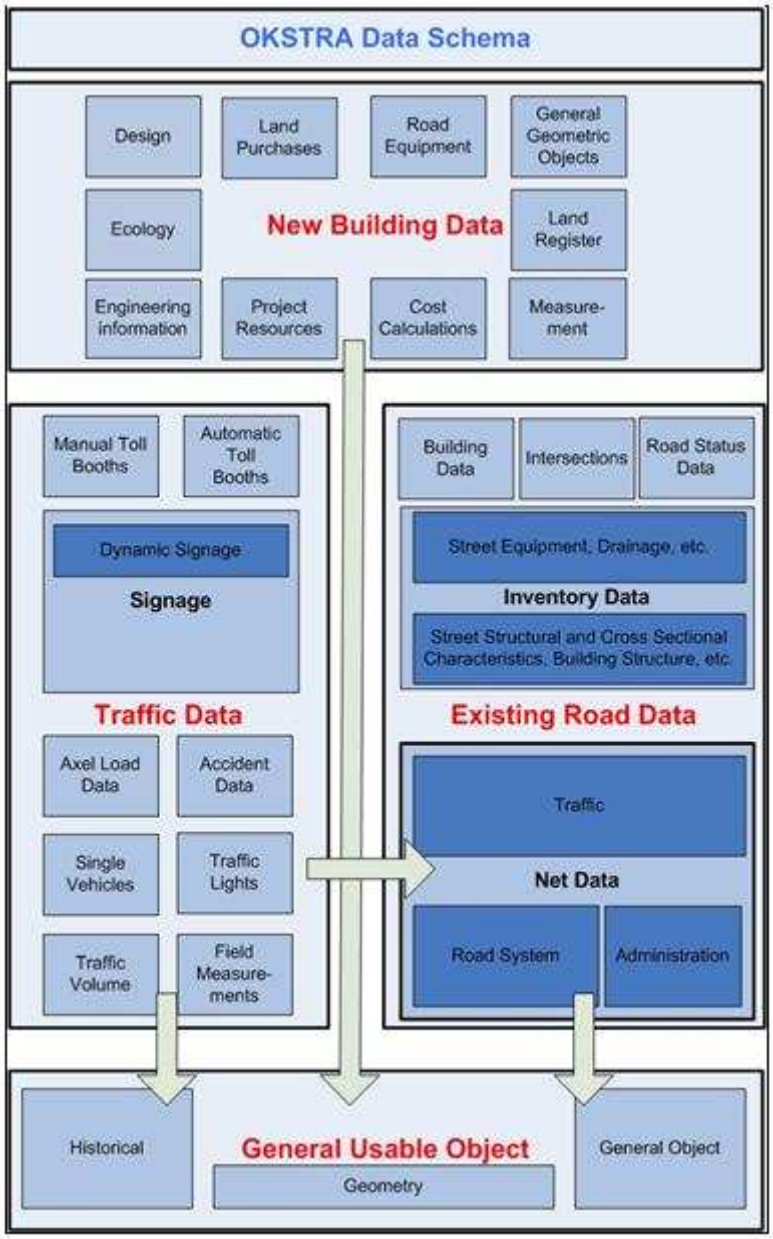

Modelling of OKSTRA is a twostep process, with the first comprising the Formulation, display and relationships of objects graphically using NIAM (Nijssen's Information Analysis Methodology, later generalized as Natural language Information Analysis Methodology) diagrams, while the second step comprises the formulation of the actual reference data schema of OKSTRA using EXPRESS (being a lexical standard for the modelling of object classes, their properties and the relationships between the objects). Currently OKSTRA employs two formats for the exchange of data. The first is OKSTRA CTE (Common Table Expressions) which derives directly from the reference model in EXPRESS, while the second is OKSTRA XML (Extensible Mark-up Language). SQL (Structure Query Language) is used for the exchange of OKSTRA information amongst relational databases. (www.okstra.de)

Further examples of national road management systems are the Japanese Highway Product Model (JHDM) for the Japanese Highway Agency. The Road Shape Model Kernel (RSMK) by the Dutch Building and Construction Research Group (TNO Institute), and the EuroSTEP road product model developed for the Swedish National Roads Administration (Cus-Babic, Magdic, Tibaut, *et al* 2000). A further road product model, the Road Product Model (PMC) has been developed by Danijel Rebolj, Nenad Cus-babic, Andrej Tibaut and Ales Magdic from the Slovenian University of Maribor (Cus-Babic, Magdic, Tibaut, *et al* 2002).

Figure 4.5 Showing the scope of the German OKSTRA solution for roads design and management. Source: From the ifcbridge final workshop

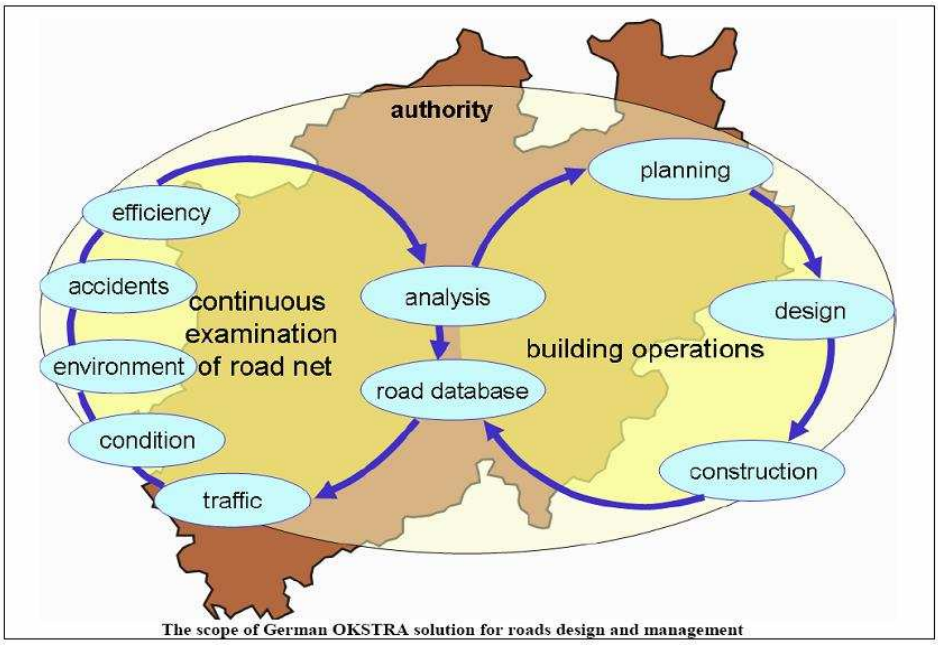

4.6 Conclusion

It would appear as if the IFC's are 'reinventing the wheel' when compared with all the various XML schemas. However, the work in the civil engineering area will allow integrated handling of both building and site work information.

Most objects associated with landscape, civil, roads and underground services are already modelled in CAD drawings. However, these associations in most cases are fundamentally 'incorrect'. Rainwater tanks should not be modelling wall objects but rather an *IfcFlowStorageDevice*, and bollards are not a column as they are neither structural nor connect to other structural elements like beams or slabs. The use of *ifcBuildingElementProxy* (trees, shrubs, signage, flagpoles, etc.) can also be argued as technically 'incorrect'. The *ifcBuildingElementProxy* definition exists solely to allow no definition to be associated to a building element; in other words, if no existing IFC object is somewhat applicable, use the proxy definition.

Road information appears to have been adequately addressed in both XML and the better road Product Models (OKSTRA, RSMK, etc.). The assumption is that the translation of this information into an IFC format should be reasonably simple. The Road Product Model OKSTRA is of particular note in this regard as it uses a similar development process methodology (EXPRESS) as the IFC's, and is available in an additional XLM format. LandXML is of further note as it has a competent XML definition of road objects.

Terrain is handled through the i*fcSite* object in the current IFC schema. However, numerous questions are evident concerning *ifcSite*: Currently, terrain in an IFC file is only represented as a single monolithic to-be-built entity, with no indication left of the site before the proposed development. The question arises if it is possible to have both an original undisturbed site and the proposed site information in one, in a desire to calculate excavation/fill requirements? Another shortcoming of the present *ifcSite* is its inability to include any geotechnical information, particularly the geological composition of the numerous strata below the surface. Handling of strata information would reduce risk as the excavating contractor would be fully aware of the prevailing conditions. Apart from below ground strata, the ability to model strata additions for new work is also desirable; an example would be the addition of topsoil for planting beds.

Above-ground building services, or IFC *distribution systems*, (telecommunications, gas, electricity, sewerage, water reticulation, etc.) are already extensively defined within the IFC.

As such it is recommended that underground services emulate exactly their aboveground counterparts. A concern with underground services is how they would interact with the terrain they reside in i.e. *ifcSite* should have the additional ability to represent both the excavation and backfill elements associated with underground services.

Landscape information, currently covered by the *ifcBuildingElementProxy* description, is an area that requires additional unique entities (proposed as an *ifcVegetaion* and *ifcLandscape*) within the IFC. This is suggested for the following reasons:

- There is potential to improve the coordination between civil engineering and landscape architectural disciplines.
- This improvement is reliant on the availability of a suitable means of organising and supporting appropriate metadata to turn the unique objects into information-rich objects that have attributes which are available to be read by other disciplines and end users.
- The attributes of the objects associated with the Landscape discipline are not adequately described by existing schemas. IFC is seen a suitable method for organising information and assisting its transfer to other end users via IFC compliant software.

5. IFC-BASED INFORMATION AND SPREADSHEET DOCUMENTATION

There was a consensus between the project participants to breakdown specific objects in both fields under IFC. Currently *ifcBuildingElementProxy* is used where certain objects are not specifically covered, ignoring the importance of the whole building process. Further IFC definitions were agreed upon in Landscaping namely *ifcVegetation* and *ifcLandscape* and in Roads namely *ifcRoad*. These objects add important elements to the building process and should be admitted.

5.1 Landscape Objects

Table 5.1 Landscape Objects

Landscape Objects	Possible Object Iterations	Current IFC coverage	Need for new IFC Object
Terrain	Geographic strata below	*Unsure*	Yes – ifcStrata Volumetric element
	Finished ground levels	*ifcSite*	No - is included in ifcSite
	Original ground levels	*ifcSite*	No - is included in *ifcSite*
Surface treatments (Soft and Hard elements)	External Paths	*ifcPath? ifcRamp?(Mango Hill - ifSlab)*	Yes - *ifcPath*
	Man-made surface treatments (pavers, gravels, membranes, artificial turf, root barriers, etc.)	*No*	Yes – *ifcSurfaceTreatment*
	Topsoil's (imported, in situ, improved, etc.)	*No*	Yes - *ifcSurfaceTreatment*
	Natural surface treatments (mulches, composts, etc.)	*No*	Yes - *ifcSurfaceTreatment*
	Planting beds	*ifcSite (delineated by profilers)*	Yes - *ifcPlantingArea*
	Profilers (more commonly Edging)	*ifcBuildingElementProxy*	Yes – *ifcEdgeStrip*
	Grasses (Seeding, sprigging, stolonising, etc.)	*Unsure (as per Trees and Shrubs)*	Yes - *ifcPlantingArea*
	Individual rocks/boulders	*ifcBuildingElementProxy*	Yes - *ifcLandscapeElement*
Vegetation (Soft elements)	Trees	*ifcBuildingElementProxy*	Yes - *ifcVegetation*
	Shrubs	*ifcBuildingElementProxy*	Yes - *ifcVegetation*
	Annuals	*assume as per Trees and Shrubs*	Yes - *ifcVegetation*
	Groundcovers	*assume as per Trees and Shrubs*	Yes - *ifcVegetation*
	Climbers/vines	*assume as per Trees and Shrubs*	Yes - *ifcVegetation*
Structures (Hard elements)	Bollards	*ifcColumn*	Yes- *ifcBollard*
	Furniture (Benches, drinking fountains, BBQ's etc.)	*ifcFuritureType*	No
	Retaining Walls	*ifcWall*	No
	Decorative Walls	*ifcWallStandardCase*	No
	Signage	*ifcBuildingElementProxy*	No
	Shelters/buildings/features	*Combination of existing ifc's*	No
	Lighting	*ifcDistributionFlowElements*	No
	Irrigation	*ifcFlowSegement ifcFlowTerminal*	No
	Planting boxes	*Combination of existing ifc's*	No
	Drainage	*ifcFlowSegement ifcFlowTerminal*	No
	Water features	*ifcFlowSegement ifcFlowTerminal others*	No

Property Set *ifcVegetation*

Placement
Genus
Species
Cultivar
Common name
Code
Plant type (e.g. Tree, Shrub, Annual, etc.)
Description
Comment
Minimum height
Maximum height
Minimum spread
Maximum spread
Preferred spacing
Bag/pot size (supply container size)
Unit cost
Common use
Seasonal colour
Growth pattern
Hardiness
Required light
Zone
Soil type
Acidity
Supply trunk diameter - base
Supply trunk diameter - top
Mature trunk diameter - base
Mature trunk diameter - top
Leaf/blade size
Staking/supporting structure
Live /dead
Fertilizer description and requirement
Care instructions

Property Set ifcLandscape

Material
Geometry
Placement
Cost
Hydrology
Colour (Material?)
Size range
Slope/fall (Placement?)

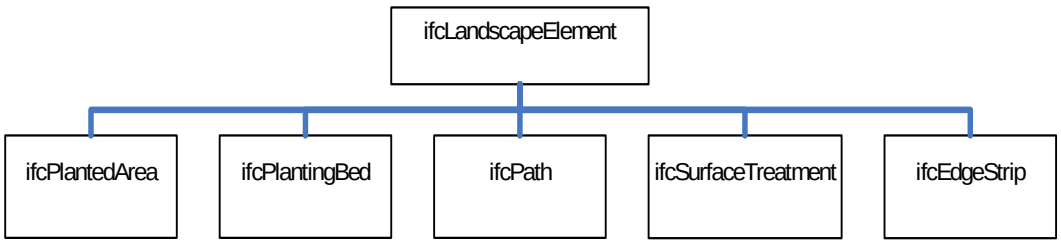

5.2 Road Objects

Table 5.2 Road Objects

Road Objects	Possible Objects	Current IFC coverage	Need for new IFC Object
Boundary	Fences (all types)	Yes	No
	Noise barrier	Yes	No
	Maintenance marker posts	Unsure	Unsure - suspect that it's already covered
	Emergency stopping bays	No	Yes - Proposed *ifcRoad*
	Roadside facilities - rest stops (refuse, ablutions, picnic areas, etc.)	Yes	No
	Bus stop facilities (shelters, signage, etc.)	Yes	No
Drainage	Cross Drainage	Yes - *ifcFlow*	No
	Longitudinal Drainage	Yes - *ifcFlow*	No
	Table Drain	Yes - *ifcFlow*	No
	Catch Bank	Yes - *ifcFlow*	No
	Catch Drain	Yes - *ifcFlow*	No
	Bedding and Backfill	*No (IfcDistributionChamberElementType - Pset_DistributionChamberElementTypeTrench*	Yes - Proposed extensions to *ifcSite*
	Sub Soil Drainage	Yes - *ifcFlow*	No
	Flood Depth Indicators	No	Yes - *ifcLandscapeElement*
	Erosion Protection (Geofrabrics, gubbions, planting, etc.)	No	Yes - *ifcLandscapeElement*
	Gully Pits	Yes - *ifcFlow*	No
Median	Islands	No	Yes - *ifcTrafficIsland*
	Plantings	No	See section 5.1
	Paved Area	Unsure	See Section 5.1

Road Objects	Possible Objects	Current IFC coverage	Need for new IFC Object
Footpath/verge	Paved Pedestrian Footpath	No	Yes – See Section 5.1
	Retaining Wall	Yes	No
	Street Lighting	Yes - *ifcDistribution*	No
	Pedestrian Ramps	*Yes - ifcRamp*	No
	Retaining Walls	Yes	No
	Traffic signs - dynamic (Variable message)	Yes - *IfcDistributionControlElement*	No
	Traffic Signs - static (Regulatory, Direction, Advertising)	No	Yes - *ifcRoadFeature*
	Parking Meters	No	Yes – *ifcRoadFeature*
	Bikeway	No (but could be extension of footpath?)	Yes - *ifcRoad*
	Public Utilities	*IfcFlow* and *IfcDistribution*	
	Mineral Resources Department Utilities	*IfcFlow and IfcDistribution*	
	Enforcement Devices (Weight-in-motion, Fixed Speed Cameras)	Yes - *IfcDistributionControlElement*	No
Miscellaneous	Kerb and Channel	No	Yes - *ifcKerbs*
	Channel	No	Yes - *ifcKerbs*
	Mountable Kerb	No	Yes - *ifcKerbs*
	Barrier Kerb	No	Yes - *ifcKerbs*
Road/predestrian bridge	Footway	Yes - Under the proposed *IfcBridge*	No
	Deck wearing surface	Yes - Under the proposed *IfcBridge*	No
	Bridge abutments	Yes - Under the proposed *IfcBridge*	No
	Deck units	Yes - Under the proposed *IfcBridge*	No
	Piers	Yes - Under the proposed *IfcBridge*	No
	Spill through	Yes - Under the proposed *IfcBridge*	No
	Relieving slabs	Yes - Under the proposed *IfcBridge*	No

Road Objects	Possible Objects	Current IFC coverage	Need for new IFC Object
Pavement	Marking (Lanes, Chevrons)	No	Yes - *ifcLaneMarking*
	Raised Reflective Markings	No	Yes - *ifcLaneMarking*
	Surfacing (Bitumen, Asphalt)	No	Yes – *ifcRoadLayer*
	Base Material	No	Yes – *ifcRoadLayer*
	Sub-Base Material	No	Yes – *ifcRoadLayer*
	Sub Grade	No	Yes – *ifcRoadLayer*
	Earthworks	No	Yes – *ifcRoadLayer*
	Fill Batter	No	Yes – *ifcRoadLayer*
	Cut Batter	No	Yes – *ifcRoadLayer*
Shoulder/Parking Lane	Road Edge Guide Posts	Combination of existing objects	Yes - *ifcRoadFeature*
	Steel Beam Guardrails	Combination of existing objects	Yes - *ifcRoadFeature*
	Concrete Safety Barrier	Combination of existing objects	Yes - *ifcRoadFeature*
	Wire Rope Barrier	Combination of existing objects	Yes - *ifcRoadFeature*
	Emergency Phones	Yes - IfcDistributionControlElement	Yes - *ifcRoadFeature*

Property Set *ifcRoad*

Material
Geometry
Placement
Cost

6. RESULTS

6.1 Discipline Views

Within this project, there are four components: landscape design, site works, road works, and underground services, none of which are well covered within the current IFC model. Consequently, the IFC model must be extended in order to support this activity. One of the aspects involved in collaboration is the discipline view; these are the particular groups of objects that are the responsibility of a particular discipline – Architect, Mechanical Engineer, Structural engineers, etc. The four disciplines of most concern are covered in the four components mentioned above and no one aspect is completely independent. Since each of these systems must coordinate with others and some such as underground services are actually cross disciplinary requiring hydraulic and electrical engineers to collaborate on the location of sumps and underground channels that distribute the building services. Within this project and the testing projects we have received from the Industry Partners, there are a range of views: structural, architectural, electrical, hydraulic, and the HVAC view. We also have two views showing the finished levels and existing contours of the site, and also the landscape view that shows the position, size, configuration of individual trees, etc. For full coordination to occur, all of the views need to be able to merge. Current 'CAD' systems do this in different ways; the Autodesk Revit suite, for example merges, the architectural, structural and MEP (Mechanical, Electrical and Plumbing) systems by using the same file format. This is fine as long as they exclusively use the Revit platform. If any level of interoperability is desired it must be through the IFC standard. For example ArchiCAD, which does not have a dedicated structural or MEP tool, allows these models to be brought in using the IFC, and merge these within the software; the Revit suite also supports this mode of IFC operation. Basically, users can opt for collaboration using either a vendor platform, file specific format or the IFC; the use of both is also conceivable.

Figure 6.1 Specific discipline views. Top left is the Site Works, top right is the Structural view, centre left is the Architectural view, centre right is the Landscape view, bottom left is the HVAC (Heating, Ventilation and Air-conditioning) view and bottom right. Source: Project Services.

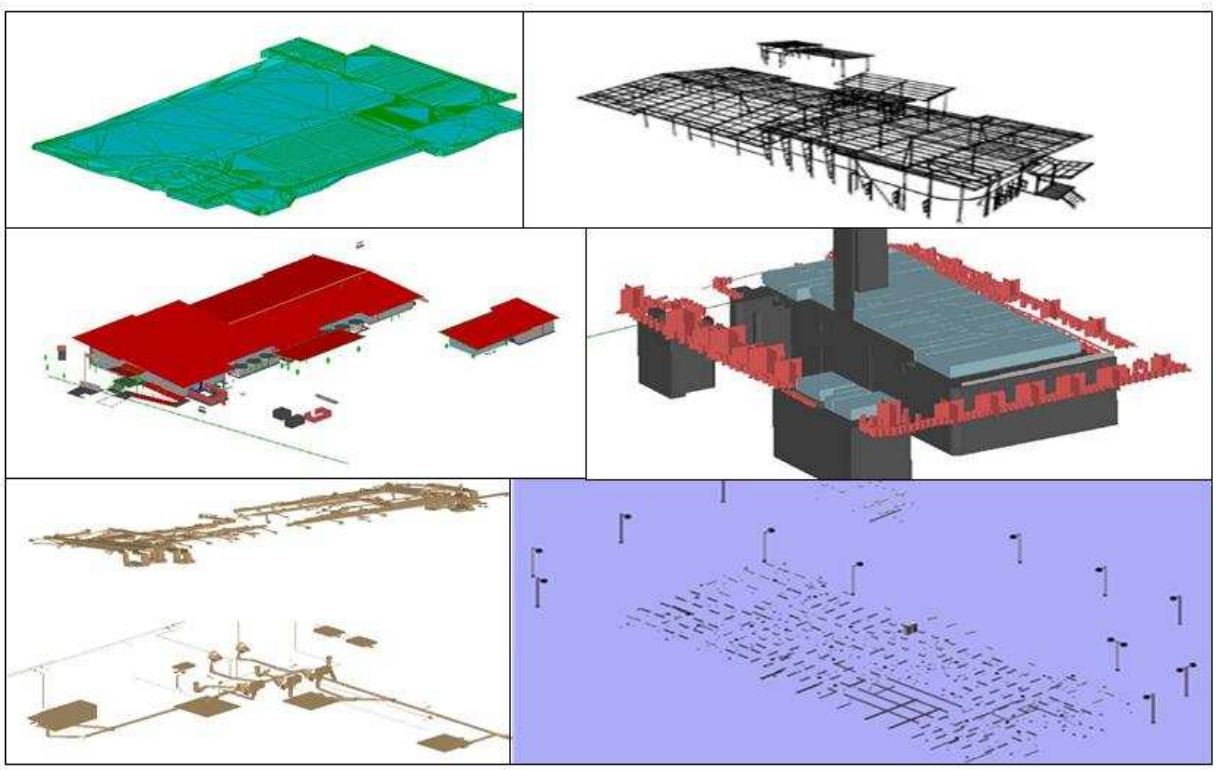

6.2 User requirements

As part of the process in defining the work within this project, information was gathered from the Industry Partners concerning user requirements, current representation systems, work process, etc. This information included diagrams concerning road configurations and representation conventions for lines in particular circumstances for road works and civil works. A model/diagram showing how architectural, civil engineering and external services activities were combined was provided; both at particular stages during the design process and also along the project time-line.

Figure 6.2 **Top – Standardised layer (string) definitions employed by both New South Wales' Road Transport Authority (RTA) and Queensland Main Roads (Image courtesy of RTA New South Wales).**
Bottom – Workflow diagram representing a typical Landscape project in Queensland. Source: Courtesy of Project Services.

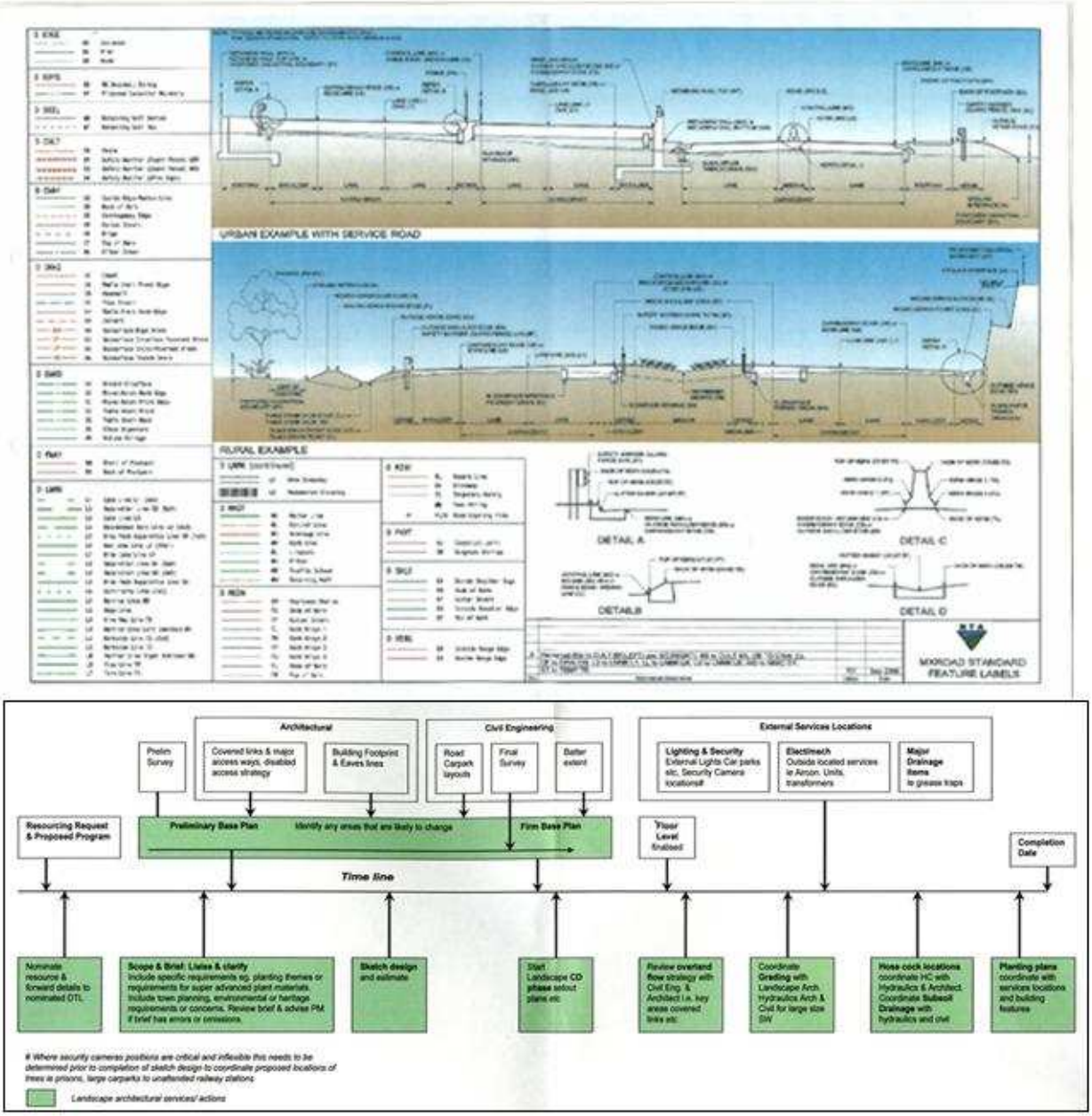

6.3 Exchange information in an IFC format

This work has been implemented in a prototype system which will start with a 12D software file containing basic terrain information (Figure 3.1). This basic information is exported in an

IFC format file and then read into the ArchiCAD landscaping plug-in Architerra. Underground services, landscaping and some roads information can then be added and merged. All of this information is consolidated and exported as an IFC file which is sent to the estimators and imported back into 12D, to show the capacity of round-tripping of the data.

6.4 Globally Unique Identifiers (GUID)

One of the key issues in collaboration is the use of Globally Unique Identifiers (GUID). In IFC files there is a unique identifier which acts as the name of a particular component, supporting the concepts of ownership of an object; permissions required to edit or delete the object; recording the history of an object - who did what to whom and when; object versioning; and the ability to track how objects change throughout the life of the project and through particular design process. Unfortunately GUID's are not properly supported in all IFC based CAD systems; in some instances GUID's are lost when a file is imported and when the file is subsequently modified. There is no simple way of tracking these changes. One of the other significant GUID areas of concern is spurious information in a file; those receiving the information will often not know whether the spurious information is a result of someone not bothering to delete something, or whether it is from an error in the file translation during the exchange operation. For work like this project to proceed, full trust in the incoming information is needed. This means that users must be able to define objects in a way that is recognisable by the receiving system. For example, a rainwater tank needs to be modelled as a solid and described as a rainwater tank, possibly through the proxy mechanism within the IFC files. A user cannot just create a number of separate objects which look like a rainwater tank but are actually very different objects. This will lead to spurious results in the receiving software, such as the estimating packages.

Figure 6.3 **Top – Spurious information as a result of not deleting particular redundant objects. Bottom – Spurious information in the form of a rainwater tank incorrectly described as two segments of a wall. Source: Courtesy of Project Services.**

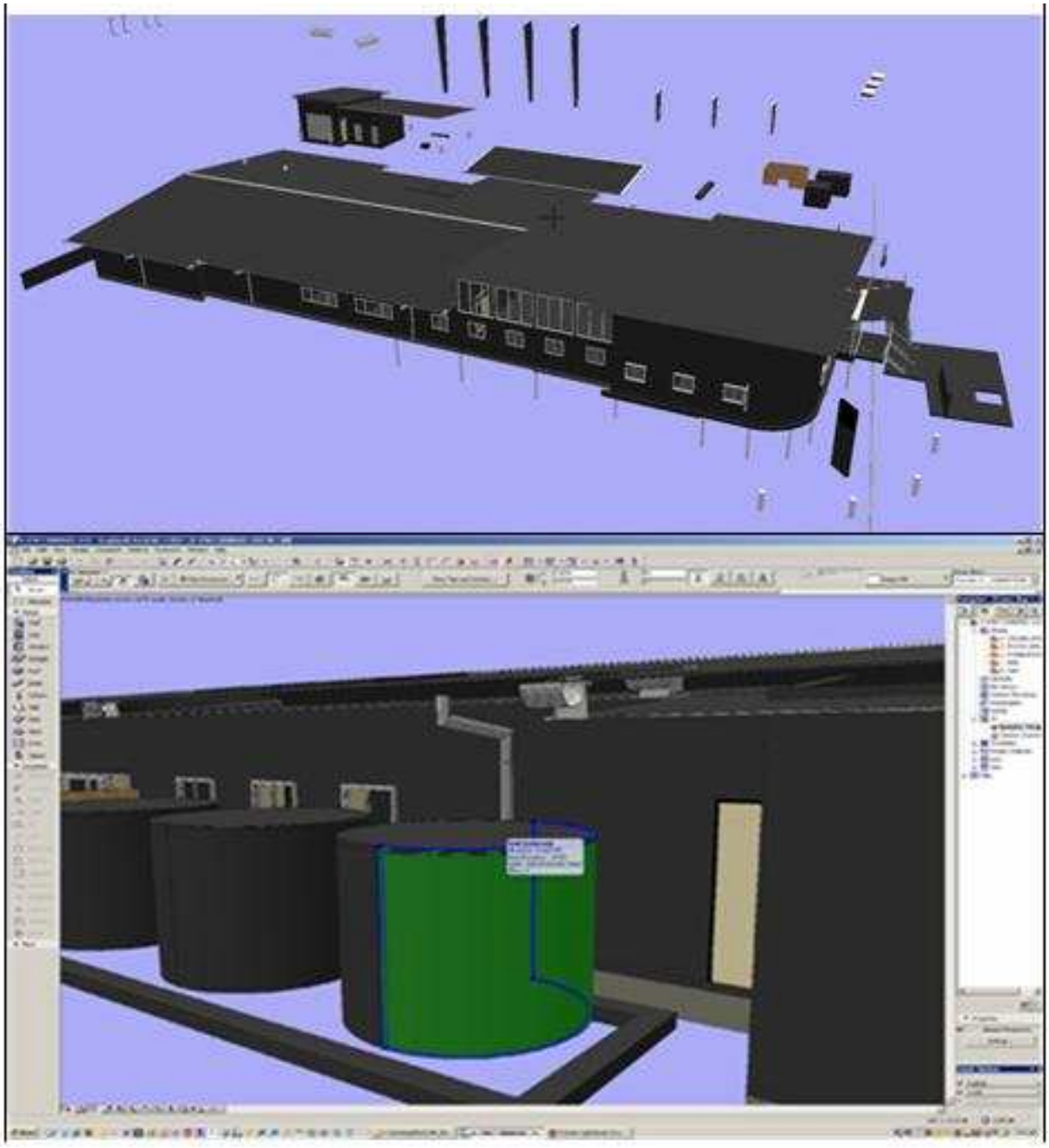

6.5 Alternatives do not save effort

Another significant area of potential problems is where alternative means of implementing the underlying data model, can cause problems in receiving systems. For example, the site works can either be attached to the IFC site object or it could be attached to the IFC project object. If software does not know where it is going to be *properly* attached in the receiving system it may not even recognise the site object and data at all.

The level of detail required to represent individual scenes within a project depends on the use of the relevant information. For example, in the case of trees the location, species, planned size and extent of the tree may be sufficient. The represented geometry of the tree can effectively be a sphere, as long as it complies with the information constraints. While photo realistic representations with all leaves individually modelled may be necessary for presentations for the public, it is inappropriate in construction documentation. Hence there needs to be alternative representations of objects, for different purposes.

Figure 6.4 **Top - Data attached to the wrong IFC object could, depending on the receiving system, be recognised or discarded. Bottom - Dependant on user and intent, in the majority of cases a billboard representation of a tree will suffice.**

6.6 Sharing data: Super Model

While sharing data, in some instances a *super-model* or an over-arching model to handle the extra semantics or meanings that are embedded in different representations is needed. For example within this project 12D software represents roads using a *string-based* convention.

Potentially we have to merge this *string-based* information into some of the other engineering software where it can be section-based (Figure 6.6). In these instances there needs to be a *super-model* that sits over the top of all this information. This is able to convert either the *string-based* or the *section-based* representation into a surface model. Then either *section-based* or *string-based* model can be generated as required by the receiving system.

Figure 6.5 Using a "Super model" to translate between representations

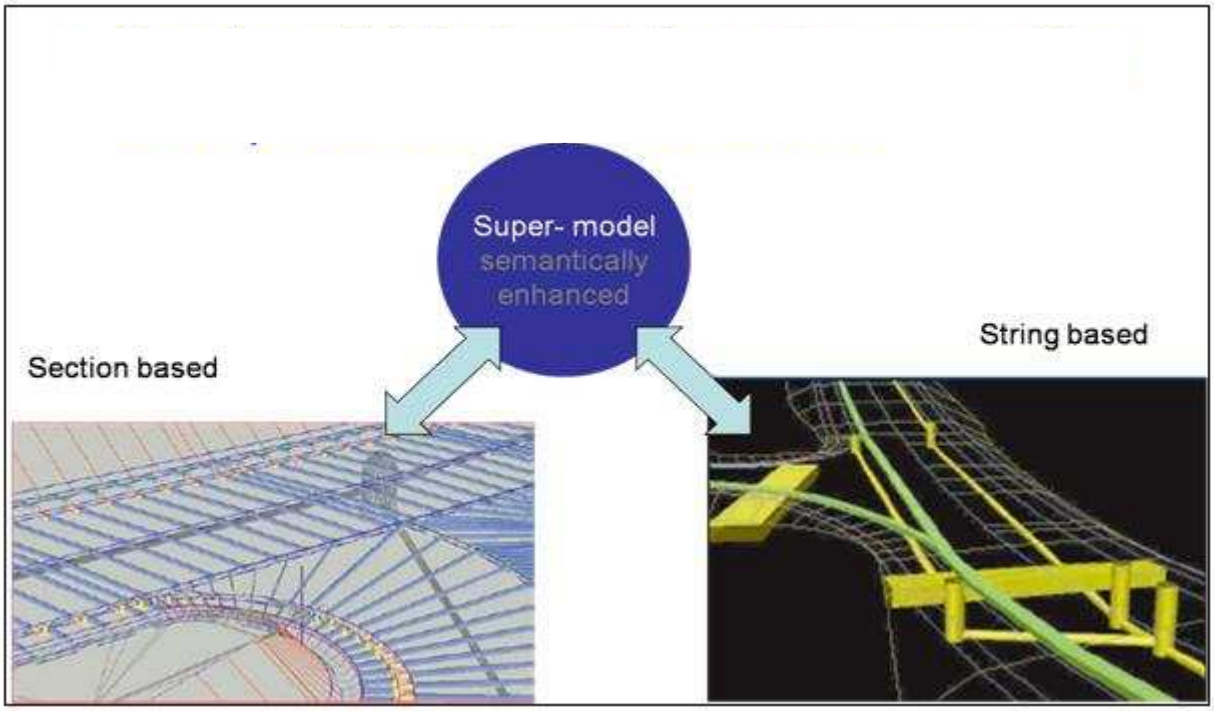

6.7 Sharing Data

Sometimes there is a situation where only the lowest common denominator can be supposed. A simple example of this is where a rectangle is extruded along an axis. If the receiving system can only understand Boundary Representations (BREP), then going from the extruded rectangle to BREP will lose information that cannot be reversed (Figure 6.7). The common issue across many exchange scenarios is that information structures vary. For example an architect or architectural operator models columns, beams and slabs as separate elements, whereas a Quantity Surveyor, form-worker or concrete subcontractor requires that the slab and beam objects are modelled as one, while the column is a further separate object (Figure 6.7).

Figure 6.6 **BREP or extruded rectangle. Right – Different consultants and contractors require different information structures.**

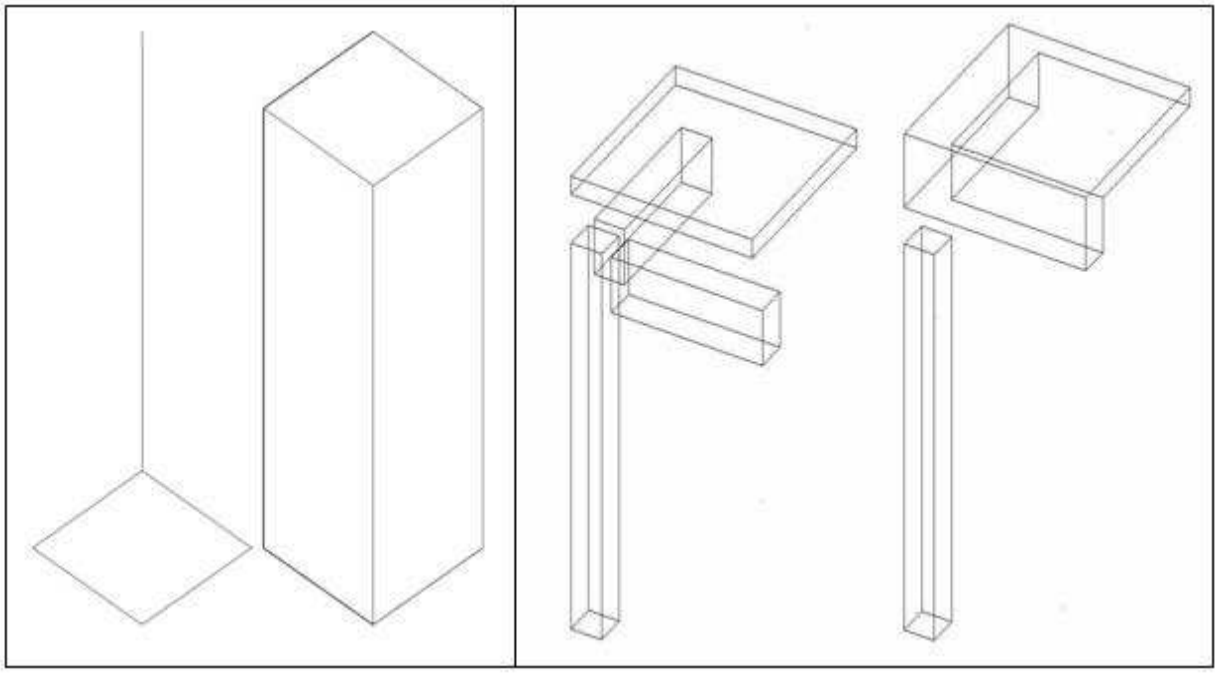

6.8 Interfaces

Interfaces are a problem in software engineering and in turn a problem of collaboration across disciplines and industries. Software engineering interfaces support collaboration by reducing the number of issues that need to be jointly considered by collaborating parties, but this reduction inhibits collaboration by hiding some of the detail. Within the built environment there are similar issues, e.g., a concrete column with embedded steel reinforcing. In certain decision making roles, architects need to know where the column is and how big it is. Basically, the architects are only worried about the external surface. In other circumstances, like writing specifications and application of finishes to the column, the concrete coverage over the reinforcing steel is needed in order to decide what type of surface finish or form finish is appropriate.

Figure 6.7 **The level of represented or visible object detail considered appropriate is ultimately depends on the scenario being undertaken.**

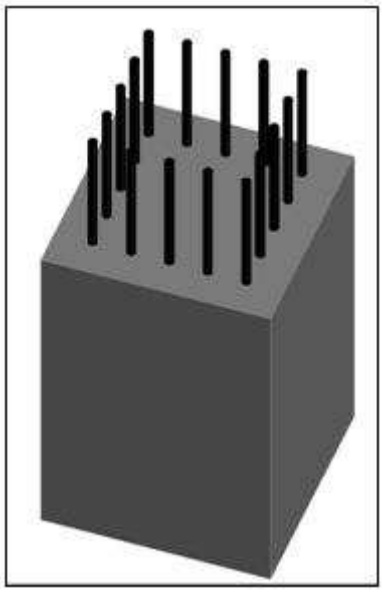

As BIM (Building Information Modelling) models are currently being successfully used on very large projects, there is little reason to doubt the technical capabilities of these models to handle massive amounts of information in these collaborative environments. Arguably, the major issue hindering BIM adoption is the number of people that are available and trained, in order to use these systems fully. In many circumstances the industry process required to use these systems is not well established, and much effort is involved in defining the process and producing an appropriate work breakdown structure for handling these large models. However, the rewards for using these models are significant. CIFE (Centre for Integrated Facility Engineering) at Stanford University have produced some Return on Investment (ROI) calculations, on what they refer to as Virtual Design and Construction (VDC) (Table 6.1). From this data, a ROI of between 5 and 60 times were indicated. However, a ROI of between 10 to 15 times is quite likely in many circumstances; a ROI of 60 is highly unusual. CIFE also did an analysis on a project that was done without VDC and calculated potential cost savings of nearly 17 million dollars on a 250 million dollar project, being approximately 8%.

Table 6.1 CIFE data indicating the potential ROI using VDC (Fischer and Drogemuller, 2009)

ROI from VDC efforts can be quite good

	Type of Project, Organization, Project Cost	VDC Model Cost	Savings from using VDC model	ROI
1	Music Center, GC, $250M	$100,000 (actual)	$500,000 (real, but estimated)	5:1
2	Office Complex, GC, $200M	$50,000 (actual)	$3,000,000 (real, but estimated)	60:1
3	Retail Complex, GC, $100M	$40,000 (actual)	$575,000 (real, but estimated)	14:1
4	Large campus with complex facilities, Owner, $250M	$400,000 (estimated)	$16,800,000 (incurred → potential savings)	42:1

Cases 1-3: VDC was used, cost and savings were realized on the project.
Case 4: VDC was not used, cost was not incurred, savings were not realized.

CIFE, Stanford University

7. IFC-BASED MODELLING AND DATA EXCHANGE, BASED ON ADVANCED LASER SCAN SURVEY DATA

7.1 Aim

The basis of all design, construction, and project delivery begins with survey information and a vision of how that will be transformed. As the built environment ages and market values change, the demand for renovation and redevelopment of existing infrastructure and, indeed, entire precincts grows. Thus, in recent years there has been a growth in the demand for survey and modelling of such environments.

As part of this *Construction Innovation* project, it was decided to study and develop the process of modelling such a precinct, beginning with detailed survey data. As precincts include not only buildings but roads, natural and architectural terrains, retaining walls, and other structures, it is clear that there will be an increasing need for better interoperability between building and civil software products. Thus, there is a natural progression from the work earlier developed in the project, interfacing 12D to building modelling products such as ArchiCAD and Revit, to developing a process for modelling from survey data to object-based models.

Typically in industry, roads and other civil structures are surveyed using total stations and other point-to-point survey techniques. Similarly, buildings have also been surveyed using these slow, tedious, and sometimes risky methods. However, the development of accurate laser scanning systems over recent years is changing the way complex structures are surveyed.

Thiess has recently purchased a new high-end laser scanner; a Leica HDS 6000, capable of scanning terrain, building, and structures at up to 500,000 points per second with an error less that 10mm (in X,Y,Z). See http://www.leica-geosystems.com/hds/en/lgs_64228.htm.

As a 'demonstrator' this project developed a process of using data from both a laser scanner and total station to develop a Building Information Model of the existing building envelopes around a precinct within the QUT campus, incorporating the terrain and other structures. The final objective was to demonstrate interoperability between building and civil applications using the enhanced IFC-civil design exchange tool developed by 12D.

7.2 Introduction to Laser Scanning

Laser scanning systems are used for the rapid acquisition of spatial data, which in turn can be utilised to model terrestrial features such as topography, structures, and vegetation. This technology is also used in manufacturing, medicine, vehicular accidents, crime, and the arts, and is capable of a wide range of measurements to almost any surface.

All laser mapping systems use remote sensing technology, which can accurately determine the 'time of flight' of transmitted laser signals to return from a targeted surface. This application combined with on-board angular sensors enables the calculation of the spatial position of each point the transmitting laser is reflected from. High acquisition and density rates can therefore define the most intricate surfaces over significant distances. Industry research indicates there is a significant trend in the market to employ these systems, and new applications are evolving on a regular basis.

These systems offer lower data acquisition and post-processing costs compared to traditional survey methods. Point for point, the cost to produce this data is significantly less than other forms of conventional mapping, making it an attractive and safe technology for a variety of survey tasks while still providing high-density, accurate geo-referenced data to end-users at a low cost. .

Laser scanning systems are a non-intrusive method of obtaining detailed and accurate spatial information. They can be used in situations where ground access is limited,

prohibited, risky to field crews, or where continuous monitoring of subsidence or productivity applications are required.

Through this technology, three-dimensional data is being utilised more than ever. Terrestrial laser scanning equipment is changing the way we control and/or manage our work in the mining and construction industry and will in the future be adopted and utilised as a key tool to support operations.

7.3 Process

It was decided to use the space around V-block at the QUT Gardens Point campus in Brisbane (Figure 7.1). As well as the building itself, this area incorporates a number of other features such as; retaining walls, trees, furniture (benches and tables), aerial walkways, and roads. Thus there are a number of structures that could not normally be modelled and exchanged in IFC format, but could be encompassed in either civil or building modelling software.

Figure 7.1 QUT Campus Map highlighting the area of survey and modelling

Figure 7.2 Photo of V-Block and surroundings

The process developed for scanning, modelling, and data exchange was as follows:

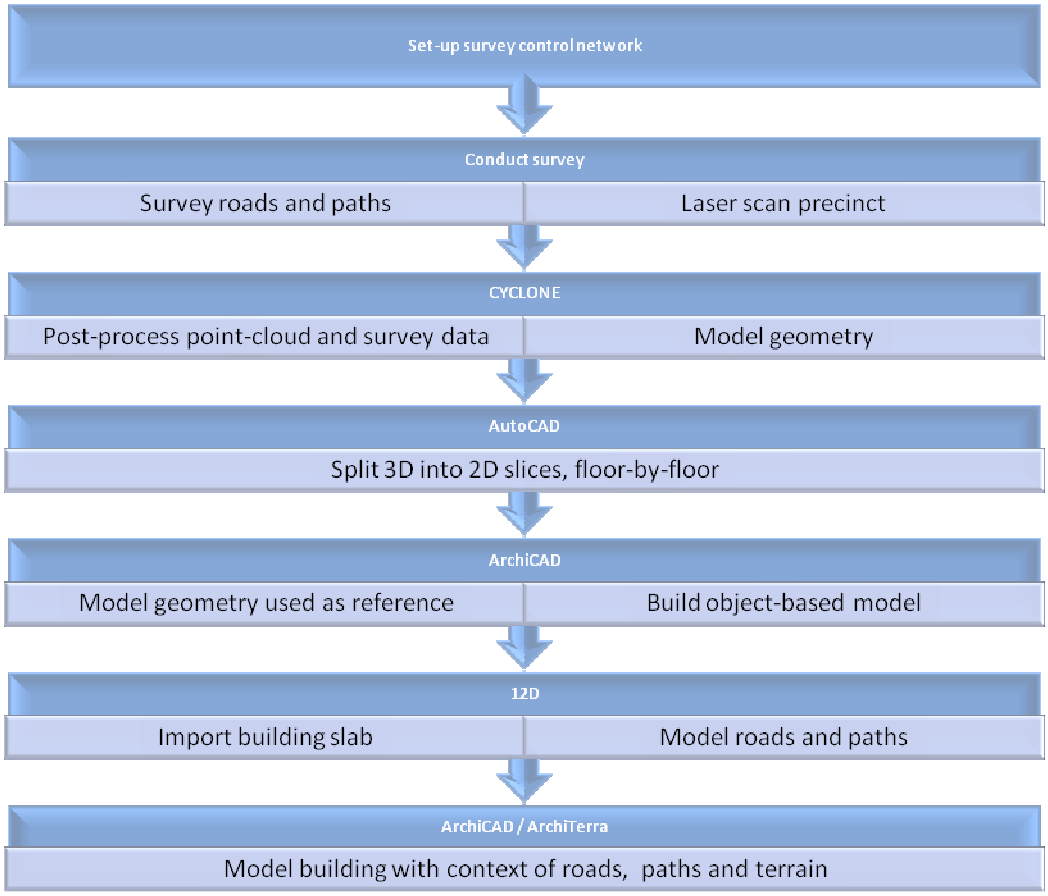

Laser scan data can contain millions of 3D points. To survey a single building from the outside, the scanner needs to be positioned and scanned from a number of locations around the building. Vast amounts of data can be collected in a single day of scanning. Leica Cyclone is used by Thiess to control and collect the point-cloud data. It is then used to align and coordinate the point clouds taken from each scanning location. Once a single set of points is established, Cyclone can then clean the data by removing points from outside the

area of interest or of objects of no interest, such as trees, vehicles, people, etc. The combined and cleaned point cloud is shown in Figure 7.3. As point clouds have solid surfaces it is difficult to see the building proper in this view.

Figure 7.3 Point cloud of V-block (close-up view)

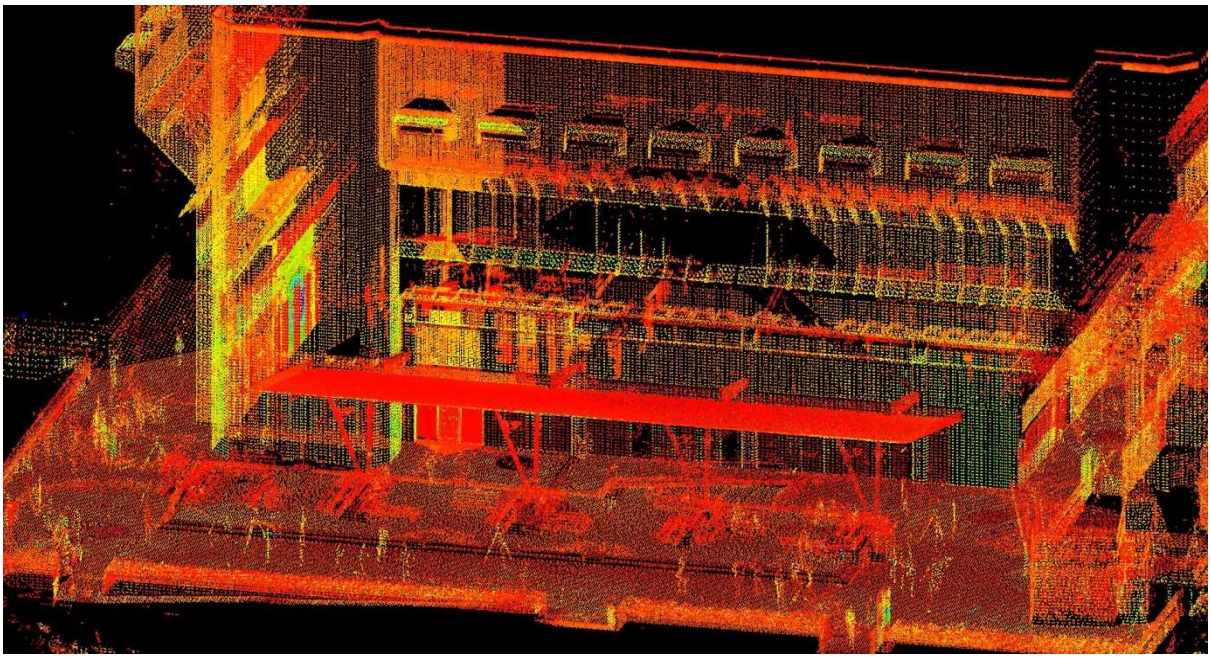

Cyclone is then used to model the geometry of the structures of interest. Cyclone contains a number of routines that can identify common objects from the point cloud, such as walls, pipes, and other surfaces, replace the points with accurate CAD objects. The enhanced model is shown in Figure 7.4.

Figure 7.4 CAD Model, as developed in Cyclone (views from two different angles)

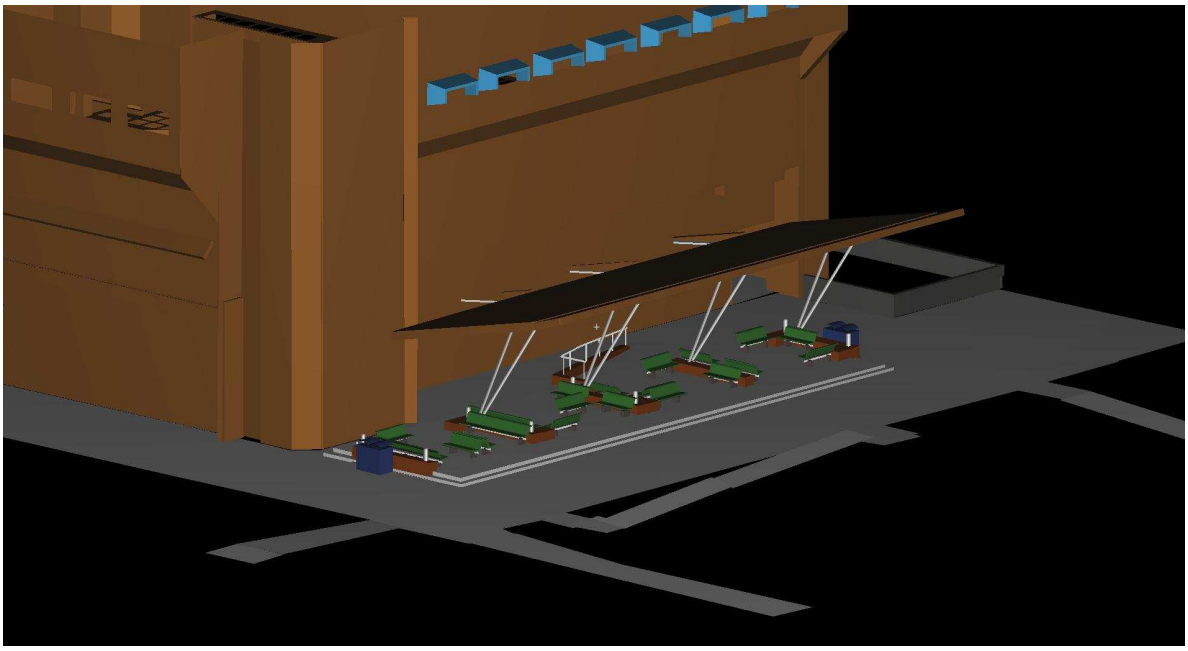

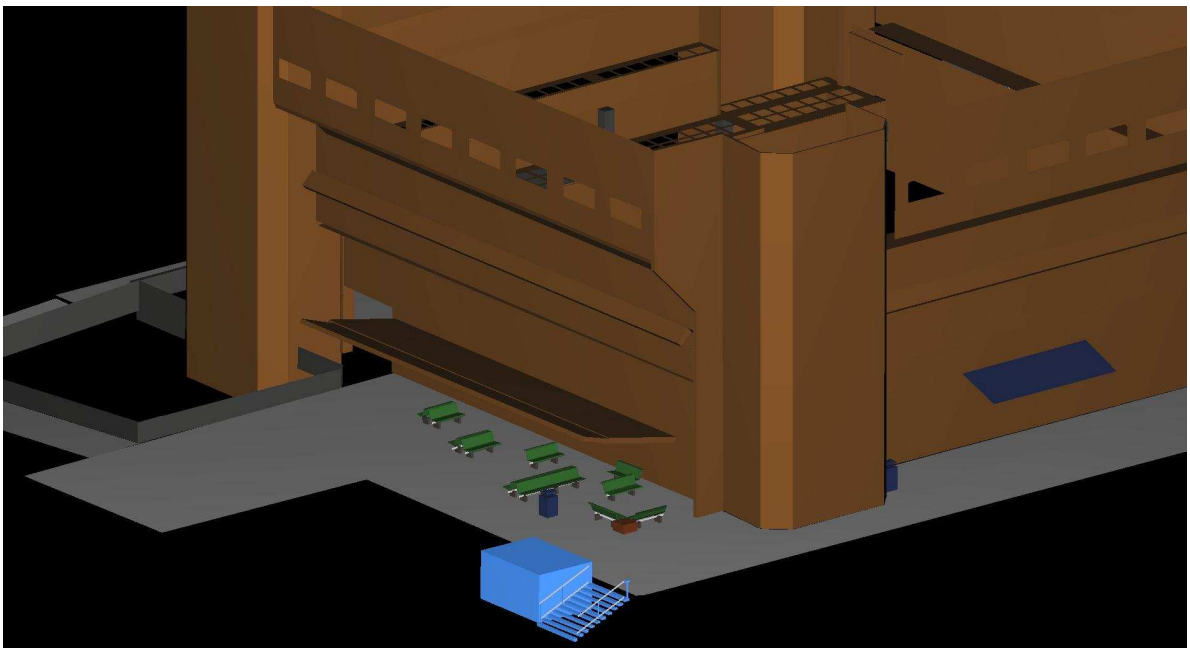

Survey data, taken from a total station, of road and path edges, was also imported in the Cyclone package to incorporate into the overall model, as shown in Figure 7.5.

Figure 7.5 Model and survey string data combined, as shown in Leica Cyclone.

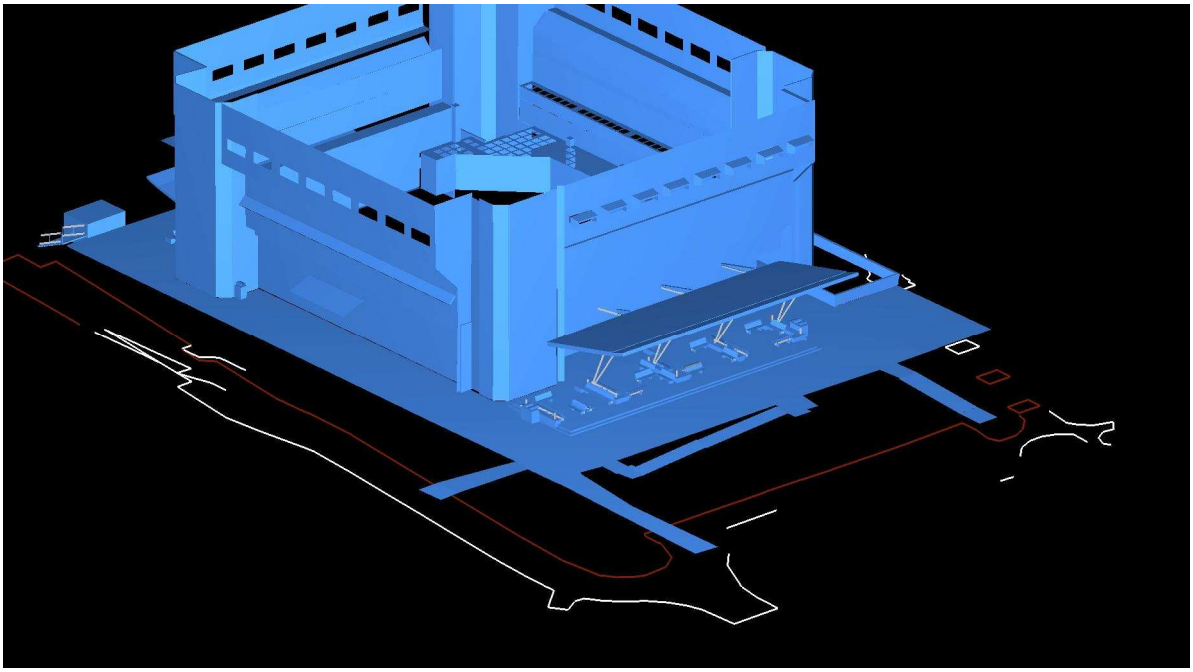

The geometric model was then exported as a DXF file. This is the only format available in Cyclone that can be imported into ArchiCAD.

The next step was to develop an object-based model of V-block in ArchiCAD. A telling sign of the current stage of the CAD industry came when it became apparent that ArchiCAD could only use 2D data as a reference for building such object models. It was hoped that the 3D model could be used to 'snap' the structural objects to the geometry, but this was not possible. So, various plan/2D slices of the 3D model were created in AutoCAD from the 3D model then imported as floor references in ArchiCAD. Whilst this added a step in the process, it was eventually successful.

Figure 7.6 shows the DXF model in ArchiCAD.

Figure 7.6 3D DXF model, as imported into ArchiCAD

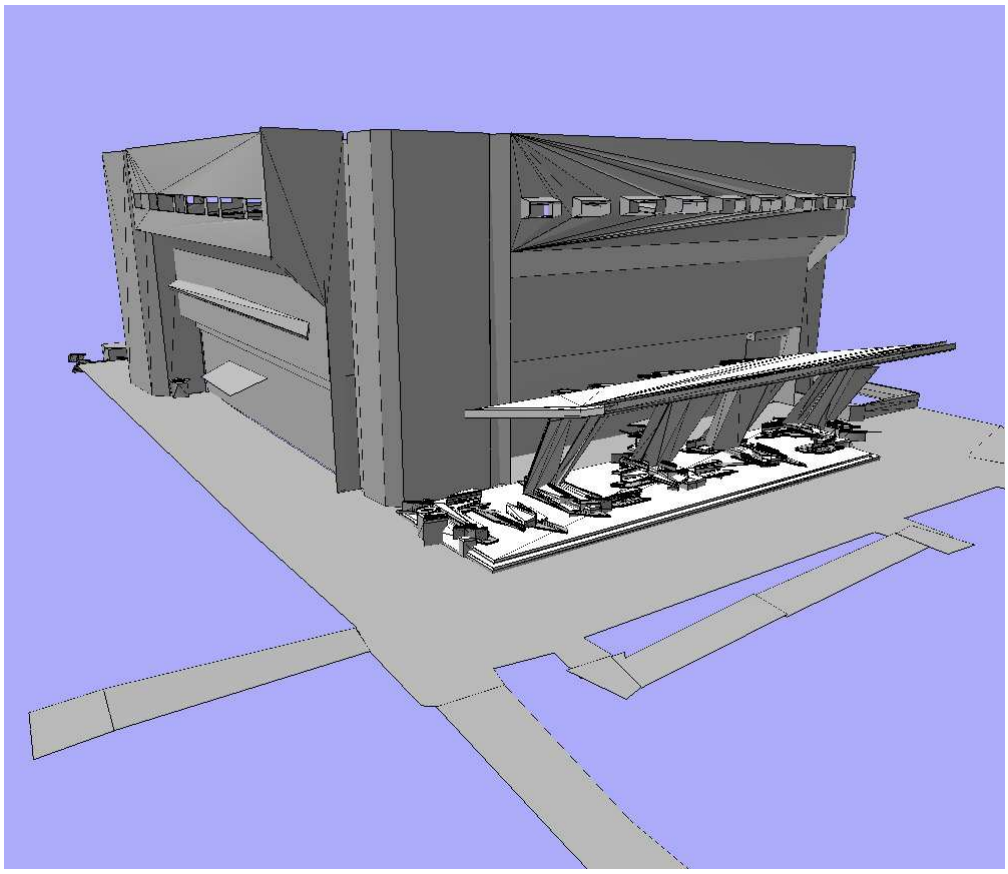

Figure 7.7 Object-based model of V-Block in ArchiCAD (as at February, 2009)

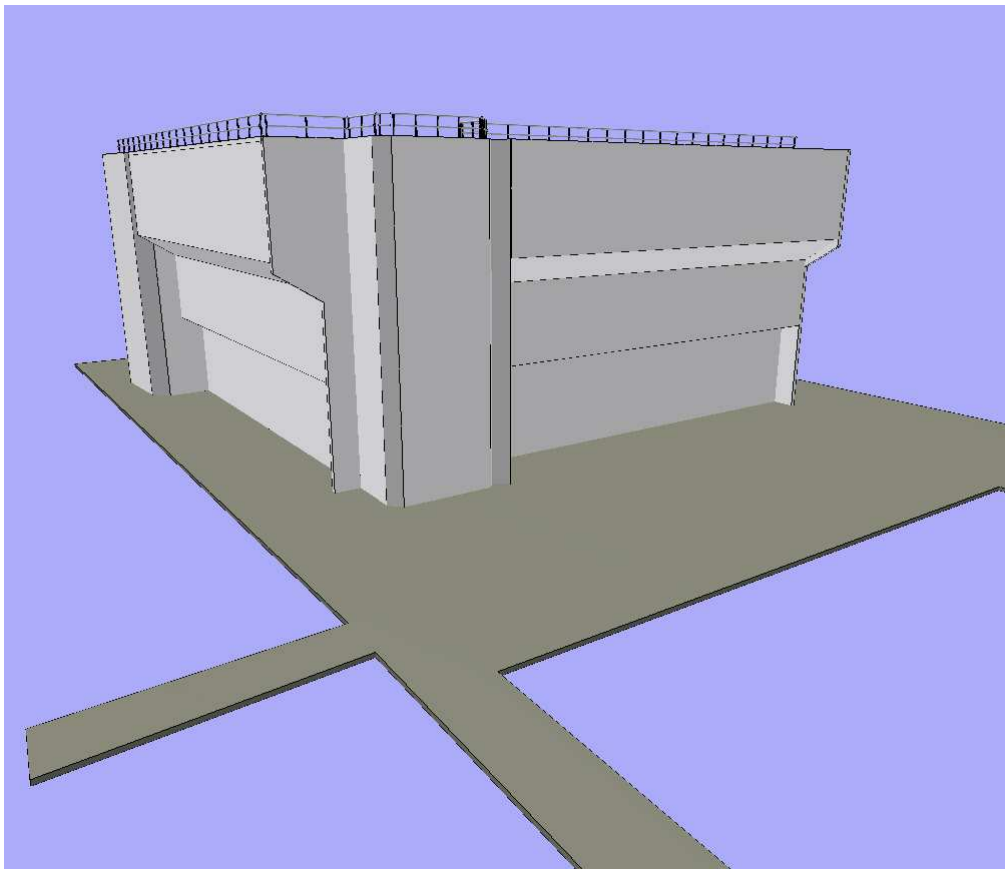

The aim of this project was to demonstrate the interoperability between 12D and ArchiCAD. Figure 7.8 shows the building slab for V-Block as imported into 12D and figure 7.9 shows the object attributes available to 12D.

Figure 7.8 Slab of V-Block, as viewed in 12D

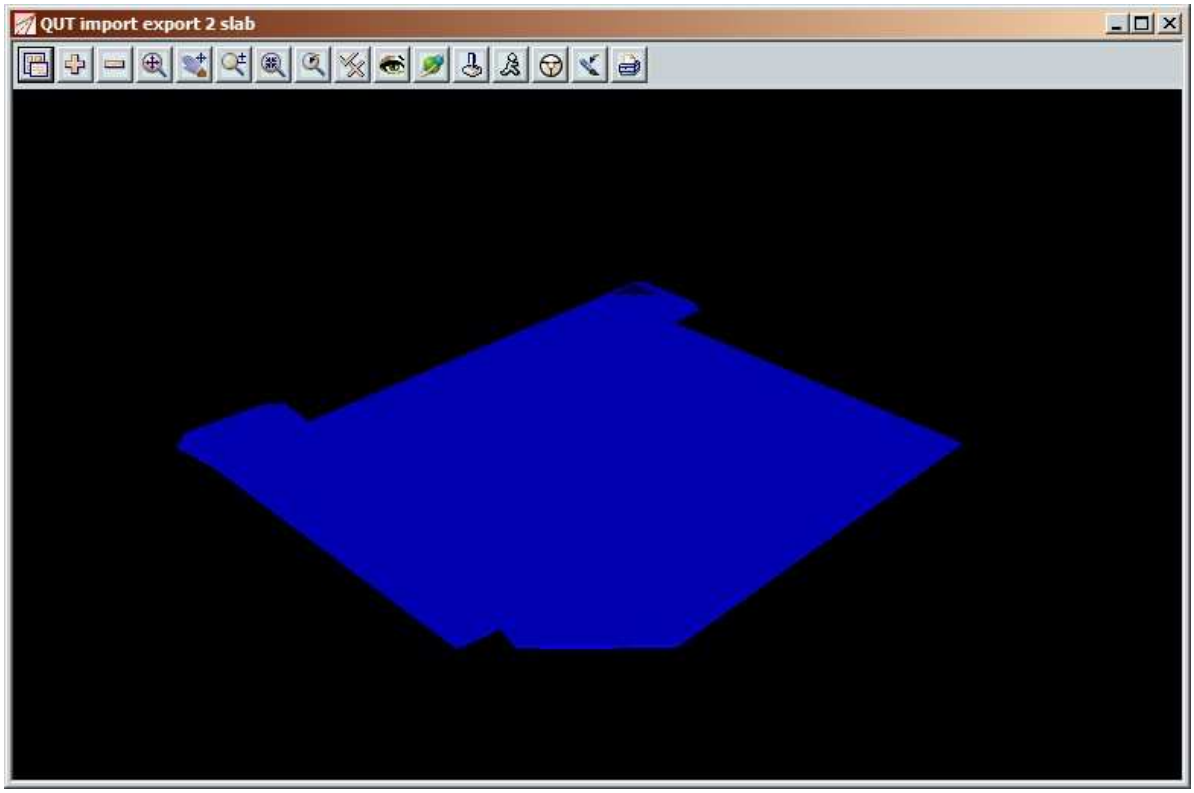

Figure 7.9 Objects and attributes available to 12D from the IFC model.

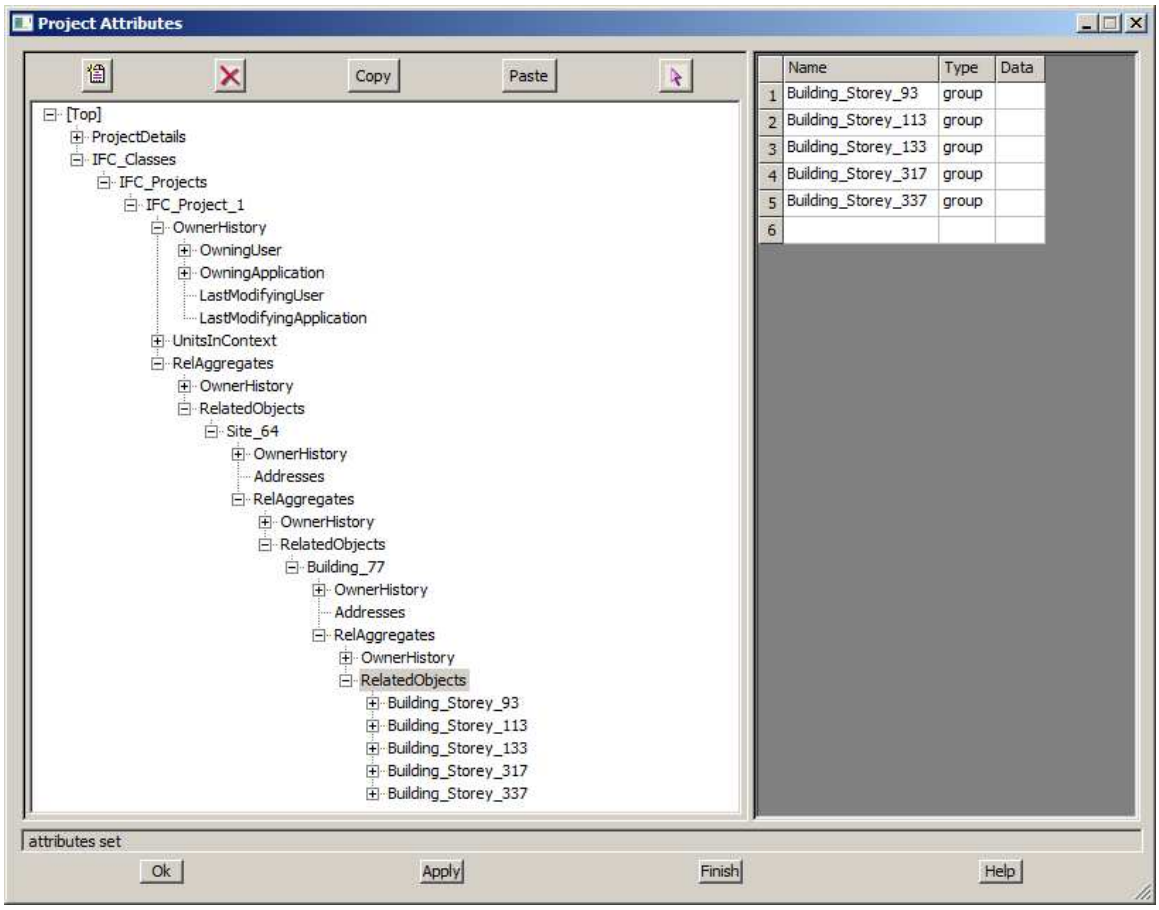

Unfortunately, due to technical issues and time constraints, further interoperability could not be demonstrated. The reasons for the technical issues were as follows;

- The implementation of the IFC format in ArchiCAD required all objects to be encapsulated within the building object.
- Coordinate system rotations were required between 12D and the IFC format.
- There were discrepancies between the implementation of poly-lines and points as geometry between 12D and the IFC format as implemented in ArchiCAD.

None of the above issues are 'show stoppers', but the lack of time and resources prevented them from all being addressed.

7.4 Potential Applications

This section discusses the potential applications of using laser scan-based data to build, enhance, and share intelligent models between different disciplines.

7.4.1 Civil / road works

In another trial, previous to the scan at the QUT campus, a Riegl scanner was used to scan the Grey Street precinct at South Bank, Brisbane (Figure 7.10).. This was a trial designed to establish the application of this scanner in urban environments. It was concluded that;

- Long-range laser scanners, such as the Riegl 420i, can be used to quickly model a complex urban environment (a 400m road corridor took 2 hours to scan & process).
- The 3D point-cloud data can also be used to quickly prepare a 2D plan, highlighting all the structures in the region scanned (especially those that are not usually shown in standard plans, such as light poles, curbs, footpaths, man-holes, trees, etc). See Figure 7.11.
- The accuracy of the long-range scanner may not be sufficient for preparing new road designs. The scan data needs to be verified by standard survey methods.

Figure 7.10 Laser scan of a section of Grey Street, South Bank, showing the Thiess Centre. The point-cloud data points have been coloured by images taken with a digital camera.

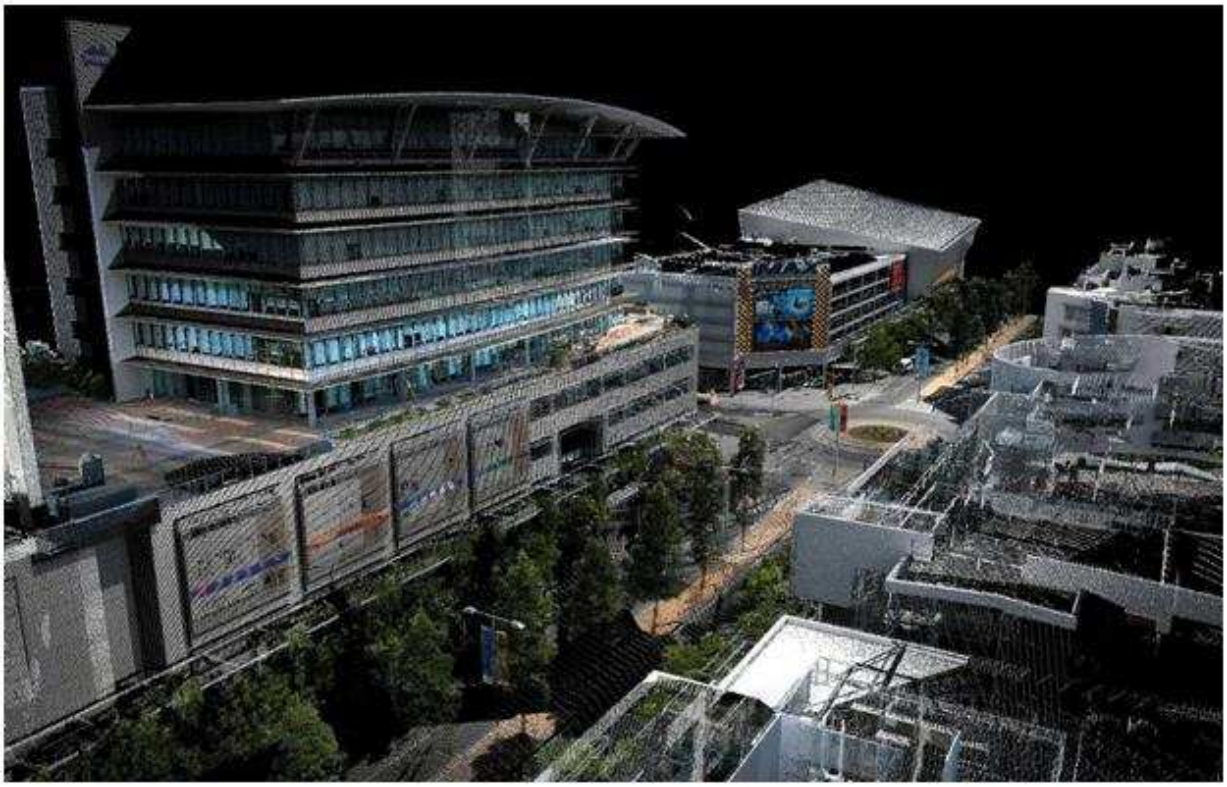

Figure 7.11 Plan view of the laser scan data of Grey Street, South Bank.

Models developed from these scans of urban environments can be used in applications such as;

- Urban renovations
- Traffic planning
- Development of new sites within the precinct
- Architectural planning
- Security studies and planning
- Safety / evacuation modelling studies

7.4.2 Mining

Laser scanning is now being used by Thiess almost on a daily basis across most mining operations to create topographical maps (surface models) of mining pits. Periodic snapshots of the surface of mining operations allow engineers and surveyors to calculate volumes of material mined, monitor progress of works, produce claims, measure mining productivities, and assess features such as the condition of ramps.

Figure 7.12 A surface model of an entire mining pit at Collinsville mine, height coloured

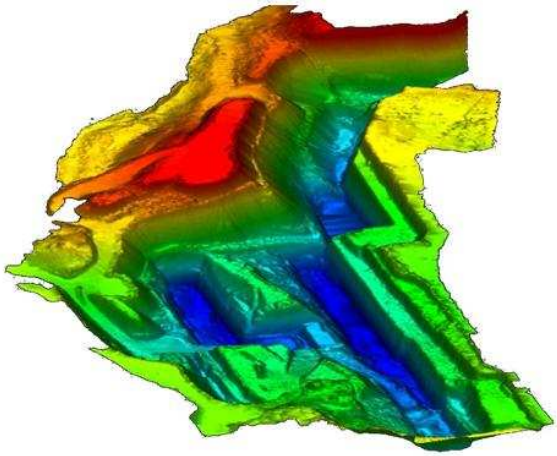

A mining operation typically needs to be scanned from a number of different locations around the pits to cover the full site. Scans are tied together in software using survey markers or 'targets' positioned around the site. The targets are also used as references to translate the scanners data to the site's coordinate system.

Data measured by the scanner can be exported to a range of file formats, such as those used by Vulcan and other site planning packages. Similarly, surface models could be developed from laser scan data in 12D, integrated with road designs, and then be made available via the IFC export to landscape and structural architects.

The benefits of using laser scanners in mining and civil operations include;

- SPEED. A full site survey, including all active mining areas and stockpiles can be completed in 1 to 3 days (depending on the size of the operation and available reference targets).
- SAFETY. Surveyors do not need to enter active mining areas to conduct their work with a laser scanner. The near-infrared class-1 laser light emitted by the scanner is totally eye safe.
- ACCURACY. Results of laser scanning on a number of operations have been verified against known survey data and mine models.

Figure 7.13 Stockpiles at the Mt. Owen mine, scanned and modelled for volume calculations

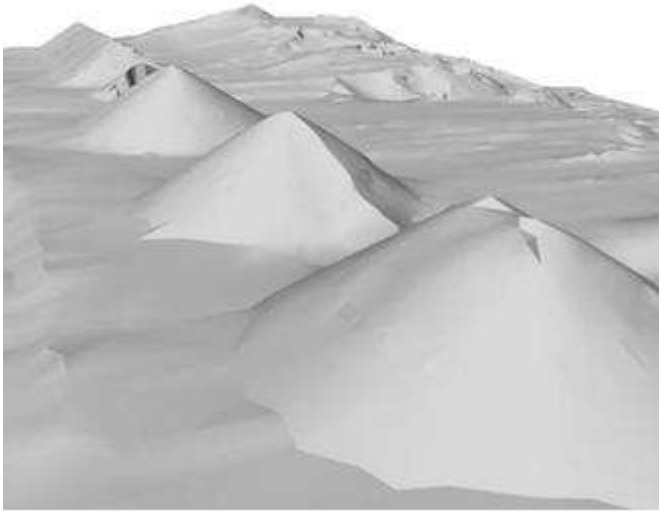

Figure 7.14 A surface model produced by laser scanning a mining pit at South Walker Creek Mine.

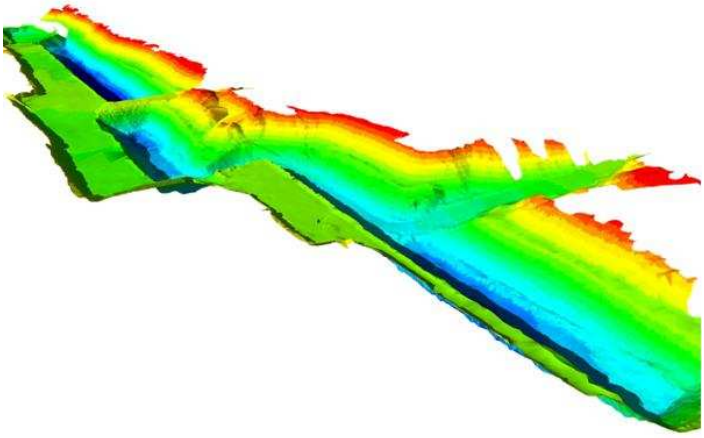

7.4.3 Plant / Equipment

Using a laser scanner and modelling software, the dimensions and capacities of plant and equipment can be accurately measured. Examples include;

- Capacity of excavator & dragline buckets
- Pinion and hoist positions
- Volume of truck payloads

Engineers and maintenance personnel use this information to check, compare, and identify potential problems that can affect productivity.

For example, South Walker Creek Mine used models created through laser scanning to compare two apparently identical dragline buckets. The scan showed that one bucket was 5% narrower in certain regions of the bucket, thus affecting dragline productivity.

In another example an excavator bucket was scanned at the Mt Owen Mine Complex. The bucket was rated at 26m3 and measured as 25.9m3, thus validating a part of the productivity calculations used by engineers.

Figure 7.15 Laser scan of an excavator at Mt Keith mine. Colour has been applied to the point-cloud data points.

An IFC interface in this application seems less important than other applications at this stage. However, like many applications in the building discipline, the business model for IFC promotes the development of other niche software tools that use the information found in the IFC format to use, analyse, and add further value to the model. Thus, in the future, it's conceivable that an IFC model of, say, an excavator bucket might be used by other software for other aspects such as in design or procurement.

7.5 Conclusions

As shown in the trial application at QUT campus, laser scanning is a powerful tool for the collection of accurate and detailed data about the geometry of structures. Creating intelligent models from this data is possible. What still remains to be seen is a robust method and toolset for migrating the rich information stored in the models between building and civil applications. The potential number of applications for such a tool is diverse, but developing such interoperability will require more time and resources.

8. CONCLUSION

The aims of this project were unique in an international context. While the aims of other existing and completed international projects have overlapped with the aims of this project, such as IFC for Roads (currently being lead from Norway) and the STEP projects looking at civil works in Japan, this is the only project that has looked at the exchange between landscaping, civil and architecture. The results from this project will be contributed towards the goals of the IFC for Roads project.

The technical aims of this project, as finally approved, were to:

1. Develop a prototype IFC model to support information interchange between civil engineers, landscape architects and architects;
2. To implement prototype IFC import/export to the 12D civil engineering design software;
3. Perform a 3D Laser scan of a portion of the QUT Gardens Point campus to indicate the capabilities of such software and the interface with 3D CAD software.

The project has demonstrated the technical feasibility of information exchange between the three disciplines through implementing the key aspects of aims (1) and (2) in software. IFC models were successfully exchanged between civil engineering software, 12D, and architectural software, Revit. This was achievable within the time and resources of the project since both 12D and Revit attach the site information at the lowest level of the IFC project hierarchy. ArchiTerra, the landscaping design software used in this project is constrained in its implementation by the ArchiCAD platform in which it is implemented as a plug-in. ArchiCAD does not implement the “site” as an internal concept, so all site data has to be attached within a “building”. While the ArchiCAD approach is permitted under the IFC model this was an extra level of implementation that was not completed within the constraints of this project. However, it would be resolved by some relatively simple extensions to the computer programming code within 12D.

One issue that emerged from the domain needs under aim (1) was the need for the exchange of “design goals”. Since a landscape architect works within the physical site context defined by the civil engineer, the landscape architect needs to know which sections of the site have been contoured to provide flows for water moving into the drainage system. This is to avoid inadvertent frustration of water flow patterns.

While the project was successful, a barrier to achieving better results was the problems experienced in obtaining the information, data, files and in-kind when it was required to progress the project. This is understandable in a project with a diverse range of participants with varying expectations but did impact on the comprehensiveness of the results.

Each of the participants in the project had different goals and expectations. All of the industry partners were users of 12D, so the project needed to demonstrate a gain over the functionality that already existed in 12D in order to provide identifiable benefits to the industry partners.

As a contractor, Thiess gained a deeper understanding of the IFC model and of the landscape design process and how landscape information would feed into their estimating and project management activities. Thiess lead the 3D laser scanning activity. This provided information on the use of laser scanning to provide rapid information on existing conditions and the development of the point cloud results into useful BIM models of facilities.

Being design organisations, Project Services (as part of the Queensland Department of Public Works) and the Queensland Department of Main Roads have a better understanding of the implications of IFC implementation for infrastructure and landscaping modelling. It has also given clarity in their internal processes for digital modelling.

Project Services had higher expectations of the project than what was achieved but acknowledged that this may have been due to a level of naivety of what was required. The project has lead to a 180 degree change of thinking for the drafters in the landscaping

section that highlighted the importance of this work. It was also a catalyst to define work processes for ArchiCAD in the landscaping space. There was also a lot if interest in the 3D scanning. This would provide significant time savings if the data could be brought directly into an architectural package. Participation in the project also brought out the significant loss in capability in the use of the 12D software brought about by staff movements.

The Department of Main Roads was expecting the data exchange work to raise the level of interest in the Department. The project has achieved initial awareness which will allow Main Roads to build to the next stage.

As a software developer and vendor, this project provided the first exposure of 12D to the IFC model. The implementation provided significant challenges since 12D is a surface modelling package and has no explicit internal representation of objects. The structured use of internal representations allowed the simulation of “object-orientedness” within the 12D software. There is interest within 12D in continuing development of an IFC interface. Participation in this project will provide technical input to possible future changes to the internal representations used in the 12D software.

As an educational provider and research institution, QUT gained insights into the use of object-based CAD in the landscape design process and the use of 3D laser scanning. This will be taken up in several of the courses taught within the Faculty of the Built Environment and Engineering.

It was not the intention within the scope of this project to commercialise the outputs, but to contribute to the international body of knowledge. However, the project did demonstrate a significant user need and a potential commercial opportunity for software houses. The industry partners all agreed that there is a global need to create a standard for digital modelling of terrain and roads. This is an area which is not currently well supported within the IFC model. It is hoped that the results of this, and other related projects such as IFC for Roads, will lead to improved support for construction work outside of the envelope of buildings.

Information on the prototype IFC model and the Final Report will be provided to the buildingSMART International technical Committee Meeting. The prototype IFC model extensions and report will be provided to buildingSMART International to ensure the IFC standard benefits from this work.

9. REFERENCES

aecXML Working Group - Architecture, Engineering and Construction. Retrieved 2008, from http://xml.coverpages.org/aecXML.html

Cus-Babic, N., Magdic, A., Rebolj, D., & Tibaut, A. (2000). *Development and application of a Road Product Model*. Paper presented at the SI-2000.

Cus-Babic, N., Magdic, A., Rebolj, D., & Tibaut, A. (2002). *Evolution of a Road Product Model*. Paper presented at the CIB W78.

Extensible Markup Language (XML). Retrieved 2 May, 2008, from http://www.w3.org/XML/

Fischer, M, Drogemuller R, (2009) Virtual Design and Construction in Newton Hampson Drogemuller, Technology design and Process innovation in the Built Environment 2009, pager 293 to 318.

Harrod, G. aecXML & IFC. Retrieved 01 May, 2008, from http://www.cadinfo.net/editorial/aecxml.htm

IFC for GIS. Retrieved 6 May, 2008, from http://www.buildingSMART.no/ifg/Content/ifg_index.htm

International Alliance for Interoperability Industry Foundation Classes IFC2x Edition 3. Retrieved 12 February 2008, from http://www.buildingSMART-international.org/Model/R2x3_final/index.htm

LandXML.org. Retrieved 17 March, 2008, from http://www.landxml.org/

Markup langage. Retrieved 21 April, 2008, from http://en.wikipedia.org/wiki/Markup_language

NCHRP 20-64 XML Schemas for the Exchange of Transportation Data. Retrieved 5 May, 2008, from http://www.transxml.org/

OKSTRA Objekt katalog für das Strassen- und Verkehrswesen. Retrieved 21 March, 2008, from http://www.okstra.de/

Yabuki, Nobuyoshi and Li, Zhantao (2007) Cooperative Reinforcing Bar Arrangement and Checking by Using Augmented Reality. CDVE 2007: 50-57

10. GLOSSARY

The following explanations are provided as a guide to acronyms, names and terms which may not be familiar to or readily understood by some readers.

AEC	Architectural, Engineering and Construction
aecXML	Architecture Engineering and Construction Extensible Mark-up Language
AF	Area Features
BASt	German Federal Institute for Roads
BDA	Bridge Design and Analysis
BIM	Building Information Modelling
BP	Bid Package
BREP	boundary representations
buildingSMART	International Alliance for Interoperability (aka IAI)
CAD	Computer Aided Drafting
CDE	collaborative development environments
CIFE	Centre for Integrated Facility Engineering (Stanford University)
CP	Construction Progress
CR	Crash Report
DP	Design Project
DXF	Drawing Exchange Format
EXPRESS	A lexical standard for the modelling of object classes, their properties and the relationships between the objects
FM	Facilities Management
GIS	Geographic Information Systems
GML	Generalised Mark-up Language
GRD	Geometric Roadway Design
GUID	globally unified identifiers
HISA	Highway Information Safety Analysis
HTML	Hyper Text Mark-up Language
HVAC	Heating, Ventilation and Air Conditioning
IBM	International Business Machines Corporation
IFC	Industry Foundation Classes
IGES	Initial Graphics Exchange Specification
ISO	International Standards Organization
JHDM	Japanese Highway Product Model
LandXML	XML for land development and civil engineering applications
LR	Linear referencing
MST	Materials Sampling and Testing
NIAM	Natural language Information Analysis Methodology
OKSTRA	Object Catalogue for the Road Transport Sector

OKSTRA CTE	Common Table Expressions
PAS	Publicly Available Specification
PCP	structural analysis program (French)
PCS	Project Construction Status
PMC	Road Product Model
Project Services	lead agency responsible for the planning and execution of most Queensland Government's building activities
ROI	Return On Investment
RSMK	Road Shape Model Kernel
SETRA	Technical Department for Transport, Roads, Bridge Engineering and Road Safety (French)
SGML	Standardised Generalised Mark-up Language
SQL	Structure Query Language
STEP	Standard for the Exchange of Product
TransXML	XML for road transport applications
VDC	Virtual Design and Construction
W3C	World Wide Web Consortium
WWW	World Wide Web
XHTML	Extensible Hyper Text Mark-up Language
XML	Extensible Mark-up Language
YLPC-Bridge	Yabuki Laboratory Prestressed Concrete
YLSG-Bridge	Yabuki Laboratory Steel Girder

11. AUTHOR BIOGRAPHIES

Mr David Nielsen
Queensland University of Technology, School of Design

Ph +61 07 3138 7044, email dnielsen@qut.edu.au

David is a Lecturer and Research Fellow at Queensland University of Technology, School of Design. His research interests include materials technology, glassing, computer modelling and building information modelling.

Cooperative Research Centre for Construction Innovation

9th Floor, L Block
QUT Gardens Point
2 George Street
BRISBANE QLD 4001
AUSTRALIA

Tel: +61 7 3138 9291

Fax: +61 7 3138 9151

Email:
enquiries@construction-innovation.info

Web:
www.construction-innovation.info

Established and supported under the Australian Government's Cooperative Research Centres Program